POLYUREATEC
POLYUREATEC GMBH
Bruchweg 96 · 41564 Kaarst
Tel. +49/21 31/1 76 88 92 · Fax +49/21 31/1 76 88 93
info@polyureatec.de · www.polyureatec.de

novaG® SPRAY EQUIPMENT

Parts Manual

Injection Unit

novaG-fill 60

novaG-fill 60 G

Issue 1.4 23/01/20
Ref. NR-00005-ENG

Please carefully read all the technical and safety documents in the Service Manual before installing and starting up this Unit. Special attention must be paid to this information in order to understand how the Unit is used. Its purpose is to enhance user safety and prevent breakdowns caused by incorrect use.

GUARANTEE

HI-TECH SPRAY EQUIPMENT, S. A. (hereinafter referred to as “HI-TECH”) offers this limited Guarantee to the original purchaser (hereinafter referred to as the “Customer”) for the unit and the original accessories delivered with it (hereinafter referred to as the “Product”) against any design, material or manufacturing defect of the Product at the time of first purchase by the user and for a period of two (2) years thereafter.

If, during the guarantee period and under normal conditions of use, the Product should fail to function correctly as a result of any design, material or manufacturing defects, it will be repaired or replaced by the authorised dealer in the country in which the Product was purchased or the HI-TECH technical assistance service, in accordance with the following

CONDITIONS

a) The validity of this guarantee is subject to presentation of the original invoice issued by the dealer authorised by HI-TECH to sell the Product together with the Product delivered for repair or replacement. The date of purchase and serial number must appear on the invoice. HI-TECH reserves the right to refuse to provide the guarantee service if this data does not appear on the invoice or has been altered since the Product was purchased.

b) The repaired or replaced Product shall continue to be covered by the original guarantee for the time remaining until its expiry or for three (3) months from the date of repair, if the original guarantee period left is shorter.

c) This guarantee shall not apply to any breakdown of the Product due to defective installation of the same, normal wear of components, any use other than that considered normal for this Product or not strictly complying with the instructions for use provided by HI-TECH; due to accident, imprudence, adjustments, alterations or modifications to the Product not authorised by HI-TECH; or due to the use of accessories, heating devices, pumping units and/or dispensers that have not been certified or manufactured by HI-TECH.

d) The guarantee applicable to the components and accessories forming part of the Product that have not been manufactured by HI-TECH shall be limited to the guarantee provided by the original manufacturer of the components and accessories.

HI-TECH WILL NOT ACKNOWLEDGE ANY OTHER EXPRESS WARRANTIES, ORAL OR WRITTEN, EXCEPT THIS PRINTED LIMITED GUARANTEE. ALL IMPLICIT GUARANTEES, INCLUDING ADAPTATION FOR SPECIFIC USE, ARE SUBJECT TO THE DURATION OF THIS WRITTEN GUARANTEE. HI-TECH SHALL HOLD NO LIABILITY OR COMMITMENT WHATSOEVER FOR ANY DAMAGES OR EXPENSES GIVEN RISE TO BY DEFECTS IN THE PERFORMANCE OF THE PRODUCT, ITS FUNCTIONING OR ITS MATERIAL DISPENSING, INCLUDING, WITHOUT LIMITATION, EXPENSES INCURRED BY DAMAGE TO PERSONS OR PROPERTY. NEITHER SHALL HI-TECH BE LIABLE UNDER ANY CIRCUMSTANCES FOR LOSS OF SPECULATIVE PROFITS OR TRADING LOSSES. REPAIR OR REPLACEMENT OF THE DEFECTIVE PRODUCT SHALL CONSTITUTE FULL COMPLIANCE WITH HI-TECH’S OBLIGATIONS WITH REGARD TO THE CUSTOMER. HI-TECH PROVIDES NO GUARANTEE WHATSOEVER FOR THE FITNESS OR SUITABILITY OF THE PRODUCT FOR ANY DETERMINED PURPOSE OR APPLICATION.

All the information provided concerning components not manufactured by HI-TECH and based on information received from the original manufacturer, even though such information is considered accurate and reliable, is provided without warranty or liability of any kind, express or implied.

Transfer, sale or financial lease of the Product by HI-TECH shall under no circumstances constitute an express or implied authorisation, agreement or granting for use of any rights or patents, and neither does it encourage, promote or endorse any breach of the same.

The warranty limitations do not imply any limitation of the consumer’s legal rights as stipulated in the applicable national legislation, and do not affect the rights deriving from the contract of sale between the consumer and the supplier.

INJECTION UNIT MOD. novaG - fill 60

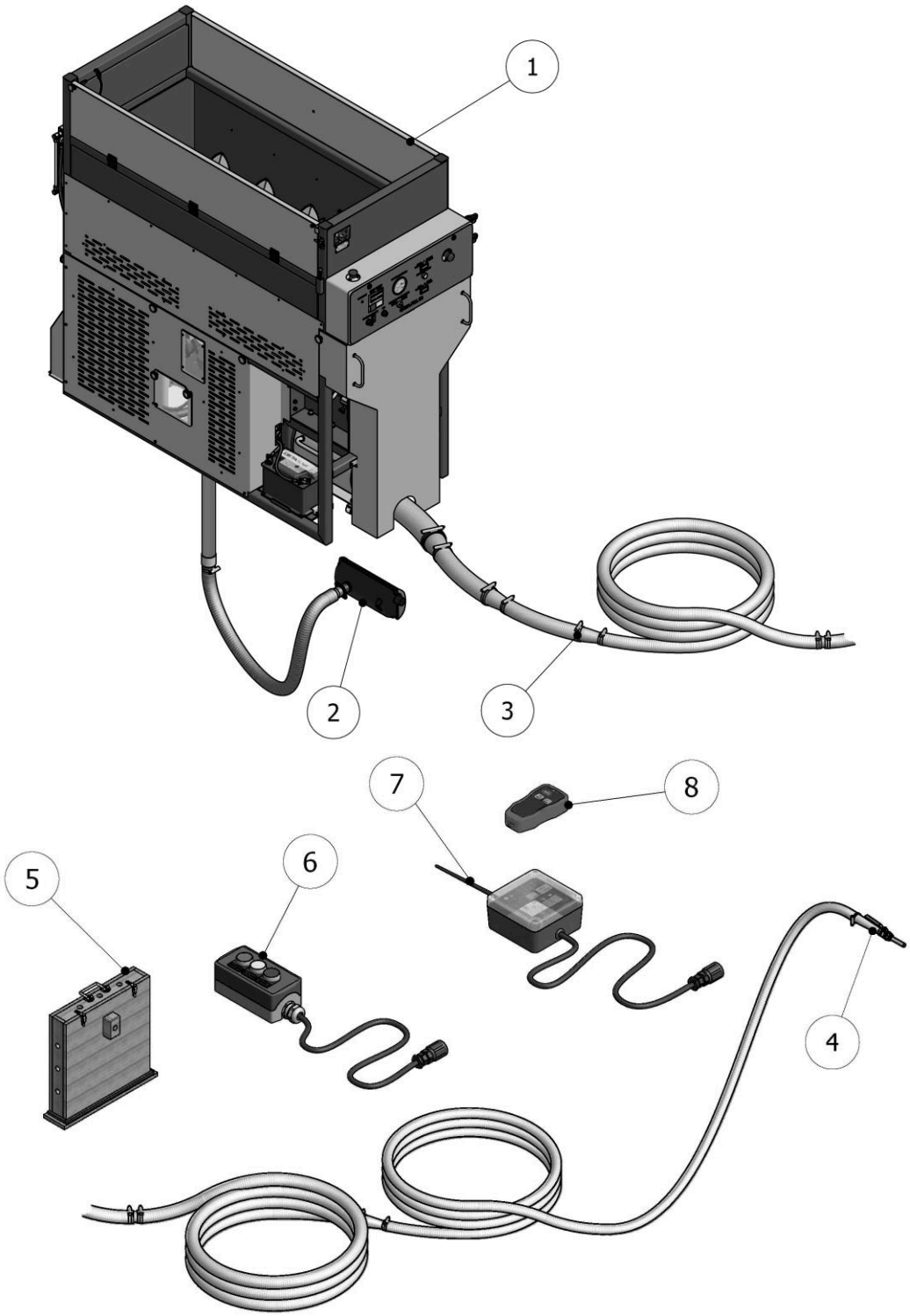

Figure 1. ***Injection unit model novaG - fill 60***

Table 1. Injection Unit Components List model novaG - fill 60

Pos.	Description	Reference	Amt.
1	Machine Unit	See Table 2	1
2	Exhaust Unit	See Table 3	1
3	Hose Unit	See Table 4	1
4	Injection Nozzle	See Table 5	1
5	Calibration Box	MQ-12036-00	1
6	Control Unit with Cable	EL-00151-07	1
7	Wireless Control Receiver sinchronized	EL-00151-06	1
8	Wireless Control Transmitter sinchronized	EL-00151-02-NG	1
8 (*)	Replacement Wireless Control Transmitter (no sinchronized)	EL-00151-03-NG	1

Table 2. List of Machine References according to Model

Reference	Description
novaG – fill 60	Standard Machine Unit (without Alternator) (DE)
novaG – fill 60 G	Special Machine Unit (with Alternator) (DE) ***(*)***
novaG – fill 60	Standard Machine Unit (without Alternator) (NL)
novaG – fill 60 G	Special Machine Unit (with Alternator) (NL) ***(*)***

Note:

(*) Machines with alternators are manufactured to special order. Please check delivery times with the marketing department.

EXHAUST UNIT MOD. novaG - fill 60

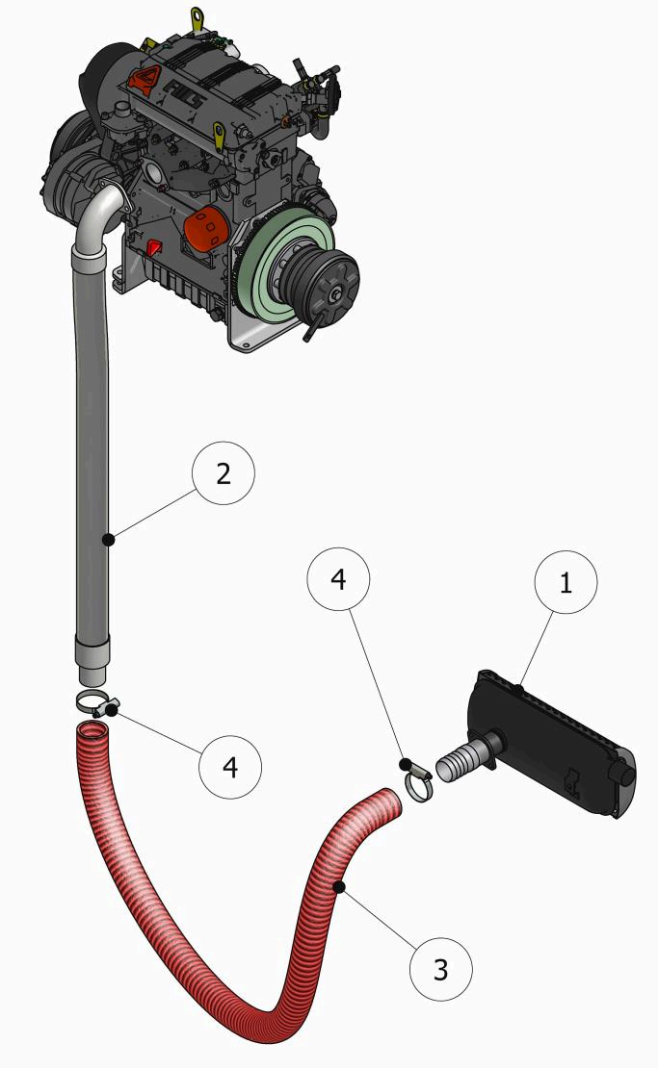

Figure 2. ***Exhaust Unit***

Table 3. Exhaust Unit Components List

Pos.	Description	Reference	Amt.
1	Exhaust Silencer Unit	MQ-12054-00	1
2	Exhaust Metallic Hose	MA-00149	1
3	Exhaust Hose	MA-00136	1 m
4	Mikalor Flange	TN-00373	2

HOSE UNIT MOD. novaG - fill 60

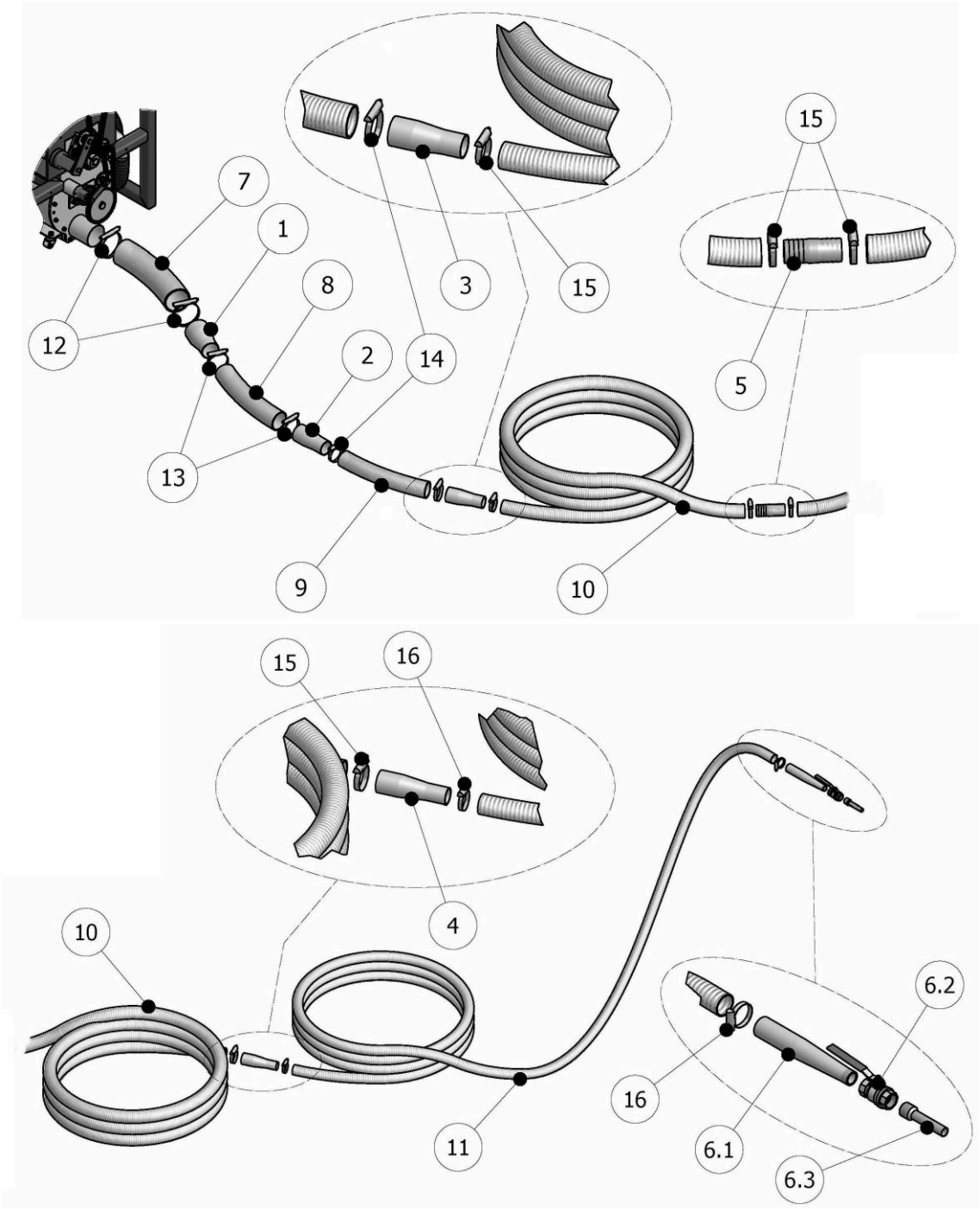

Figure 3. ***Hose Unit***

Table 4. Hose Unit Components List

Pos.	Description	Reference	Amt.
1	4”-3” Reducer	MQ-12053-06	1
2	3”-2.5” Reducer	MQ-12053-03	1
3	2.5”-2” Reducer	MQ-12053-04	1
4	2”-1.5” Reducer	MQ-12053-05	1
5	2” Coupling	MQ-12235	2
6	Injection Nozzle Unit	See Table 5	(*)
7	4” Hose Section	MA-00142	0.80m
8	3” Hose Section	MA-00141	0.80m
9	2.5” Hose Section	MA-00140	0.80m
10	2” Hose Section	MA-00138	3x15m
11	1.5” Hose Section	MA-00137	15m
12	Mikalor Flange	TN-00370	2
13	Mikalor Flange	TN-00366	2
14	Mikalor Flange	TN-00368	2
15	Mikalor Flange	TN-00353	6
16	Mikalor Flange	TN-00365	2

Note:

(*) A nozzle of each size is included with the machine.

On final assembly of the unit, if Ø21.7 and Ø19.7 injection nozzles are used, positions 4, 11 and 16 are not required.

Table 5. Injection Nozzle Unit Components List

Nozzle Ø	Reference	Pos. 6.1	Pos. 6.2	Pos. 6.3
21.7	MQ-12052-00	MQ-12038-02	RA-00078	MQ-12052-01
19.7	MQ-12038-00	MQ-12038-02	RA-00078	MQ-12038-01
17	MQ-12039-00	MQ-12039-02	RA-00078	MQ-12039-01

ELECTRIC CONSOLE

Table 6. Electric Console Variants

Description	Console Unit Ref.	Front Panel Unit Ref.	Front Panel Ref.
Console without Alternator Language ENG/DE	EL-00213-SG-DE-NG	EL-00220-00-DE-NG	EL-00220-DE-NG
Console without Alternator Language FRA/NL	EL-00213-SG-NL-NG	EL-00220-00-NL-NG	EL-00220-NL-NG
Console with Alternator Language ENG/DE	EL-00213-CG-DE-NG	EL-00220-00-DE-NG	EL-00220-DE-NG
Console with Alternator Language FRA/NL	EL-00213-CG-NL-NG	EL-00220-00-NL-NG	EL-00220-NL-NG

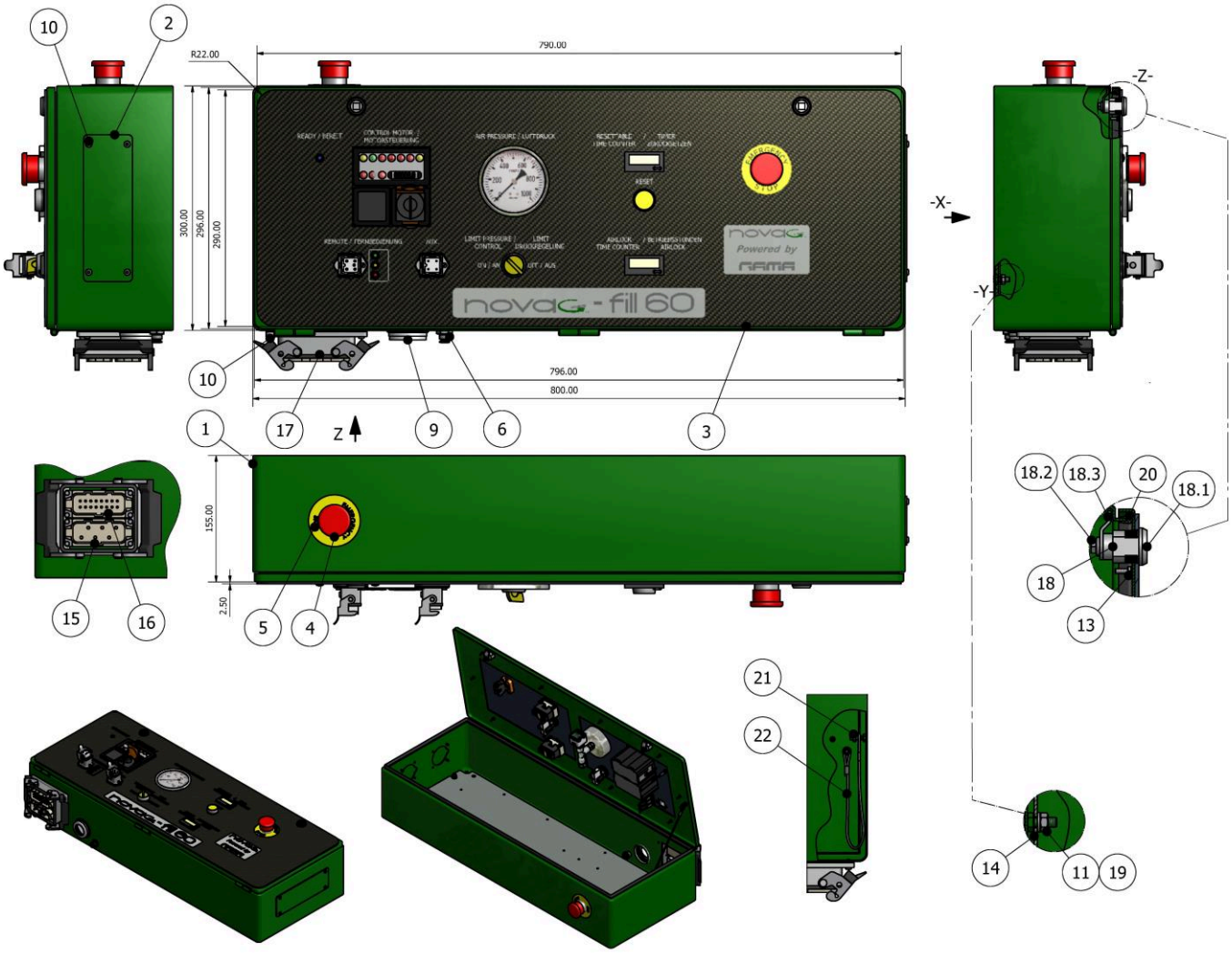

Figure 4. Electric Console, standard model without generator

Table 7. Components List for Electric Console, standard model without generator

Pos.	Description	Reference	Amt.
1	Cabinet	EL-00218-NG	1
2	Side Cover	EL-00213-02-NG	1
3	Front Panel Unit	See Table 6	1
4	Emergency Button	EL-00131-00	1
5	Emergency Button Disc	EL-00131-26	1
6	Bushing	RA-00374	1

Pos.	Description	Reference	Amt.
7			
8			
9	Rubber Bushing	EL-00095-02	1
10	ULS Bolt	TN-00239	8
11	Nut	TN-00107	4
12			
13	Nut	TN-00182	10
14	Plate	EL-00218-02	1
15	6-Pin Male Block	EL-00096-01	1
16	16-Pin Male Block	EL.00096-33	1
17	Multi-Connector Base	EL-00096-35	1
18	Lock	EL-00034-A	2
19	Washer	TN-00024	4
20	Rubber	EL-00001-06	2 m
21	Nut	TN-00107	2
22	Stopper	MQ-12254	1

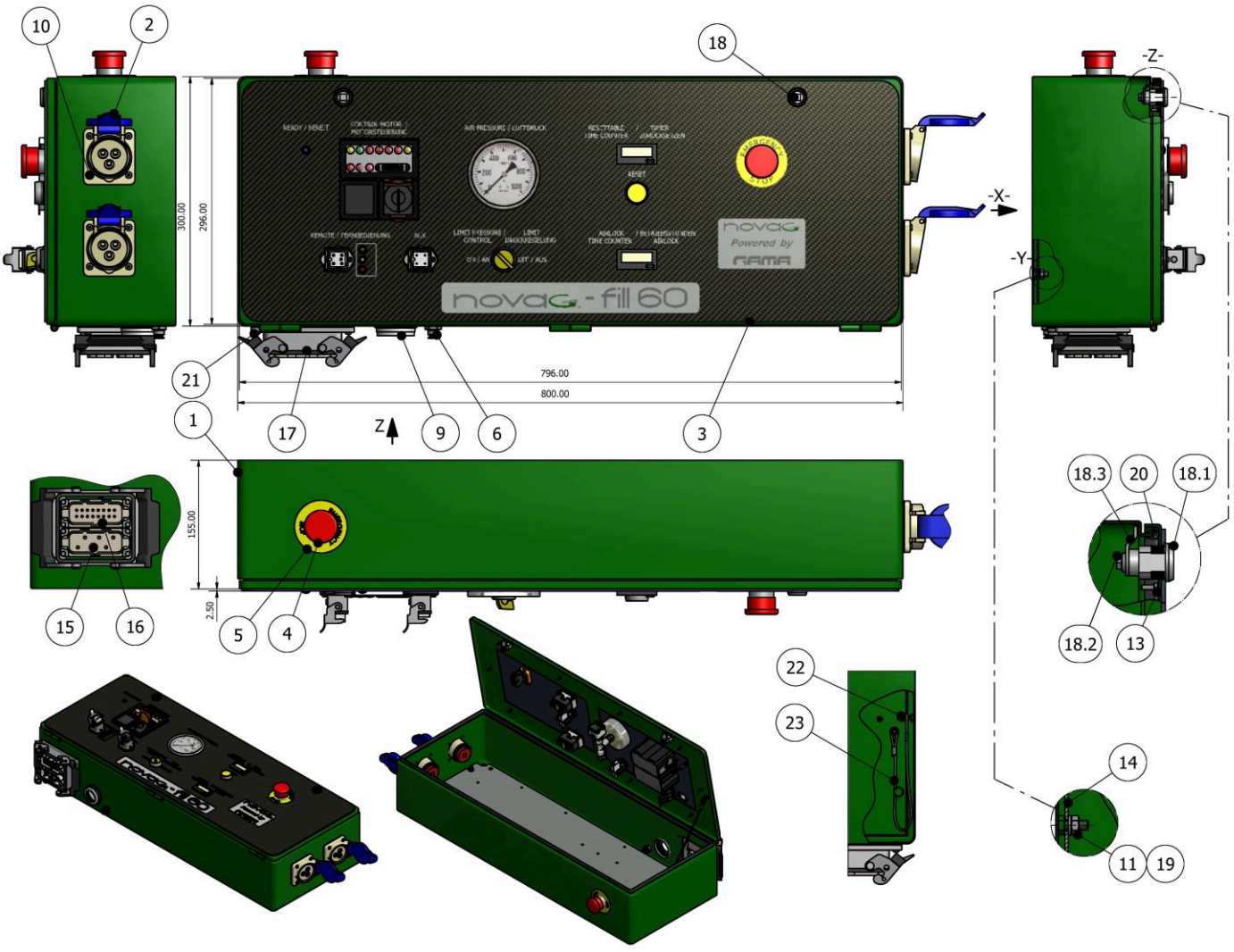

Figure 5. ***Electric Console, special model with generator***

Table 8. Components List for Electric Console, special model with generator

Pos.	Description	Reference	Amt.
1	Cabinet	EL-00218-NG	1
2	Socket	EL-00166-04	2
3	Front Panel Unit	See Table 6	1
4	Emergency Button	EL-00131-00	1
5	Emergency Button Disc	EL-00131-26	1
6	Bushing	RA-00374	1

Pos.	Description	Reference	Amt.
7			
8			
9	Rubber Bushing	EL-00095-02	1
10	Bolt	TN-00143	8
11	Nut	TN-00107	4
12			
13	Nut	TN-00182	10
14	Plate	EL-00218-02	1
15	6-Pin Male Block	EL-00096-31	1
16	16-Pin Male Block	EL.00096-33	1
17	Multi-Connector Base	EL-00095-35	1
18	Lock	EL-00034-A	2
19	Washer	TN-00024	4
20	Rubber	EL-00001-06	2 m
21	Bolt	TN-00239	4
22	Nut	TN-00107	2
23	Stopper	MQ-12254	1

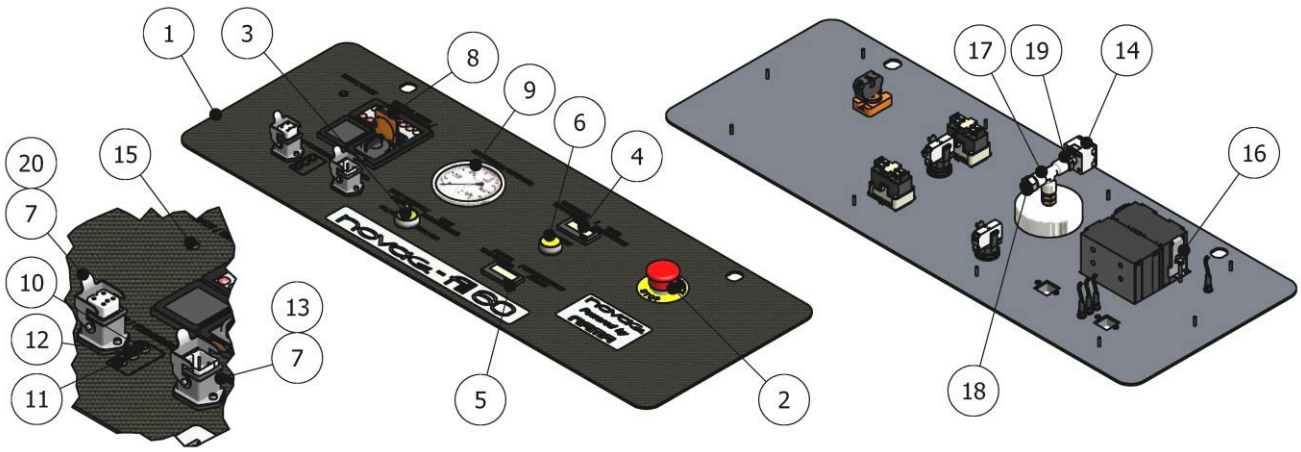

Table 9. Front Panel Unit Components List

Pos.	Description	Reference	Amt.
1	Front Panel	See Table 6	1
2	Emergency Button	EL-00131-00	1
3	2-way Switch	EL-00131-41	1
4	Counter	EL-00163-10	1
5	Counter	EL-00163-10	1
6	Reset Button	EL-00131-39	1
7	Base Connector Housing	EL-00096-65	2
8	Engine Control Panel	EL-00173-00	1
9	Manometer	HI-00112	1
10	Green LED	EL-00131-25	1
11	Red LED	EL-00131-24	1
12	Amber LED	EL-00131-23	1
13	Male Connector Base Unit	EL-00096-08	1
14	Pressure Switch	HI-00110	1
15	Blue LED	EL-00131-29	1
16	Engine Control Panel Clip	MQ-12233	2
17	T-Connector	RA-00135	1
18	Straight Connector	RA-00259	1
19	Reducer	RA-00371	1
20	Female Connector Base Unit	EL-00096-37	1

GUARDS

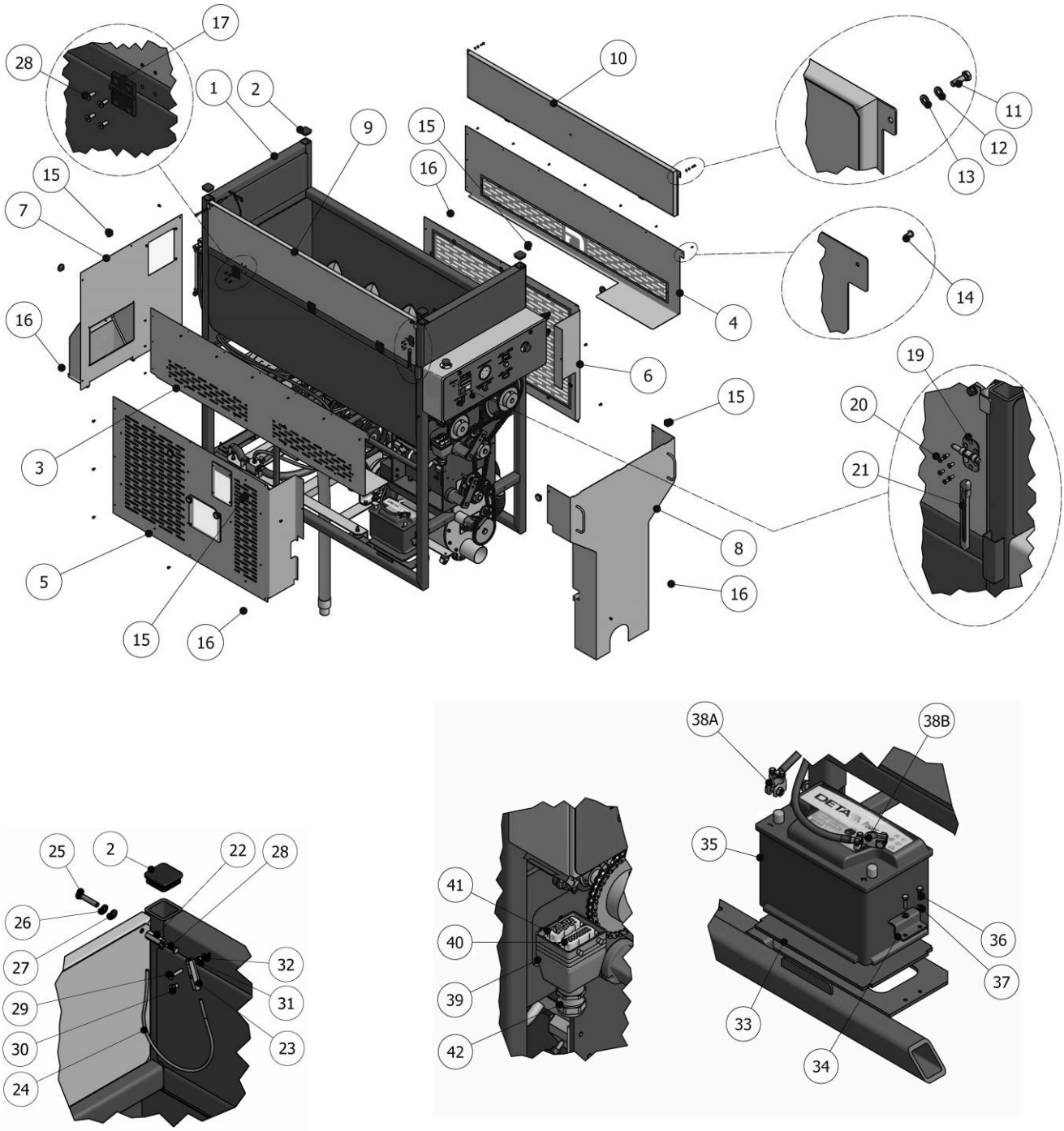

Figure 6. ***Model novaG - fill 60 Guards***

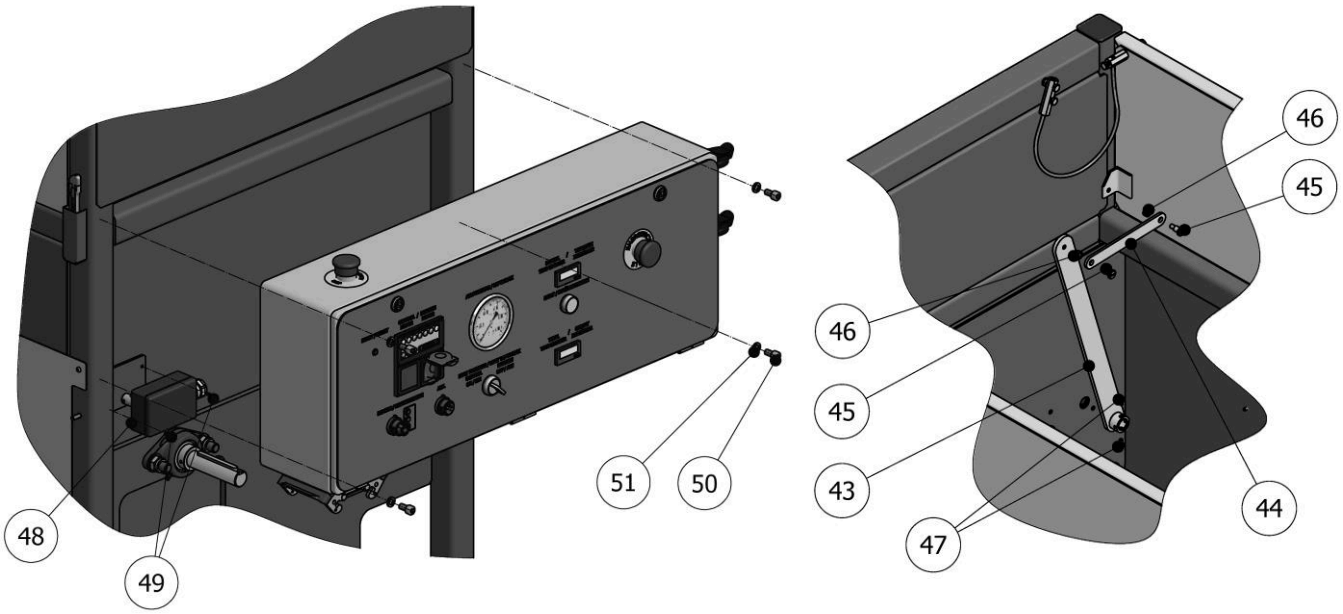

Figure 7. ***Console Fixing, Door Micro Switch and Dispenser Chutes***

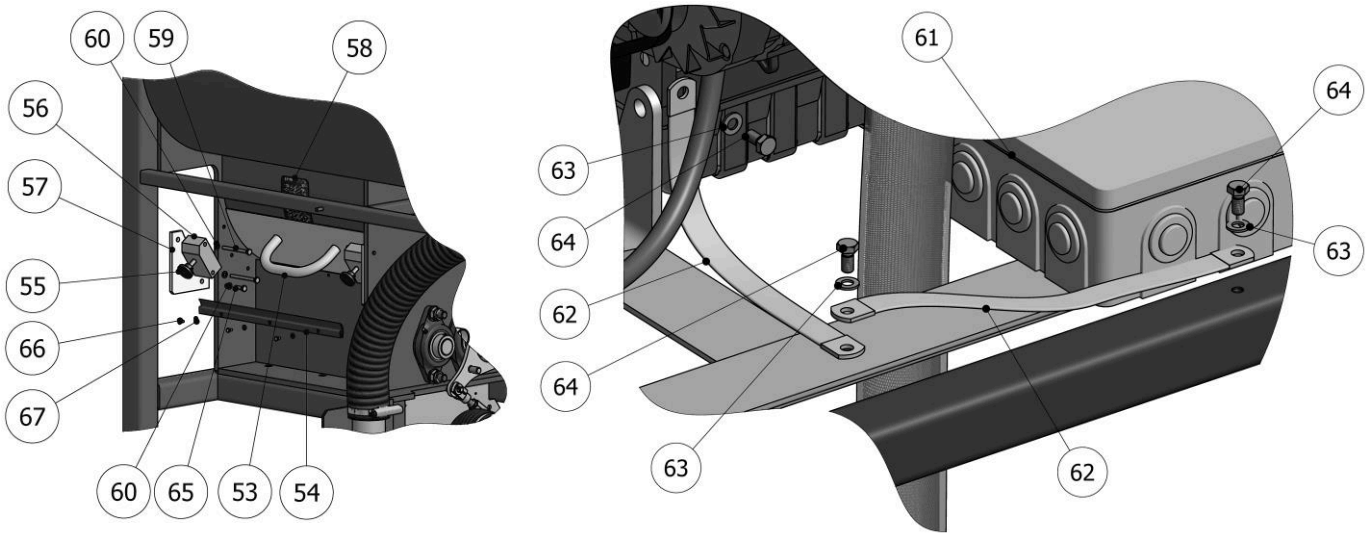

Figure 8. ***Dispenser Chutes & Ground Connection***

Table 10. Injection Unit Guard List
model novaG - fill 60

Pos.	Description	Reference	Amt.
1	Machine Structure	MQ-12001-00-NG	1
2	Top Cover	MQ-12250	4
3	Top Left Guard Unit	MQ-12027-00-NG	1
4	Top Right Guard Unit	MQ-12026-00-NG	1
5	Removable Left Guard Unit	MQ-12029-00-NG	1
6	Removable Right Guard Unit	MQ-12028-00-NG	1
7	Rear Guard Unit	MQ-12025-00-NG	1
8	Transmission Guard Unit	MQ-12030-00-NG	1
9	Hinged Top Cover	MQ-12023-00-NG	1
10	Fixed Top Cover	MQ-12024-00-NG	1
11	ULS Bolt	TN-00248	4
14	ULS Bolt	TN-00013	20
15	Knob Nut	TN-00435	8
16	Hex. Bolt	TN-00356	17
17	Hinge	MQ-12234	3
18	Countersunk Bolt	TN-00322	12
19	Catch	MQ-12247	1
20	ULS Bolt	TN-00143	6
21	Cutter	HT-00102	1
22	Lower Door Bar	MQ-12043	2
23	Upper Door Bar	MQ-12044	2
24	Bar Cable	MQ-12248	2
25	Hex Bolt	TN-00051	2
26	Washer	TN-00028	2
27	Washer	TN-00119	2
28	Allen Bolt	TN-00026	2
29	Hex Bolt	TN-00362	2
30	Set Screw	TN-00363	4
31	Nut	TN-00108	2
32	Washer	TN-00024	2

Pos.	Description	Reference	Amt.
33	Battery Stand	MQ-12051	1
34	Battery Flange	MQ-12042-NG	2
35	Battery	EL-00214	1
36	Hex Bolt	TN-00276	4
37	Washer	TN-00025	4
38A	Battery Connector (Negative Pole)	EL-00100-21	1
38B	Battery Connector (Positive Pole)	EL-00100-20	1
39	Multi-Connector Housing	EL-00096-36	1
40	6-Pin Female Base	EL-00096-34	1
41	6-Pin Female Base	EL-00096-32	1
42	Gland	EL-00087-03	1
	Reducer	EL-00091-06	1
43	Micro Cam Lever	MQ-12034-00-NG	1
44	Door Micro Switch Lever	MQ-12035-NG	1
45	Shaft Bolt	TN-00331	2
46	Bushing	TN-00332	2
47	Hex Bolt	TN-00371	2
48	Door Safety Micro Switch	EL-00020-01	1
49	Allen Bolt	TN-00001	2
50	Allen Bolt	TN-00186	4
51	Washer	TN-00028	4
53	Chute	MQ-12004-00-NG	2
54	Chute Seal	OR-00126	2
55	Chute Lock	MQ-12031-02	4
56	Locking Screw Support	MQ-12031-01	4
57	Chute Guide	MQ-12031	4
58	Chute Scale	EM-00062	2
59	Hex Bolt	TN-00328	8
60	Washer	TN-00025	12
61	Connection Box	EL-00158-12	1
62	Ground Connection	EL-00103-21	2

Pos.	Description	Reference	Amt.
63	Hex. Bolt	TN-00114	3
64	Washer	TN-00119	3
65	Hex. Bolt	TN-00276	4
66	Hex. Bolt	TN-00317	6
67	Washer	TN-00104	6

Upper Guards

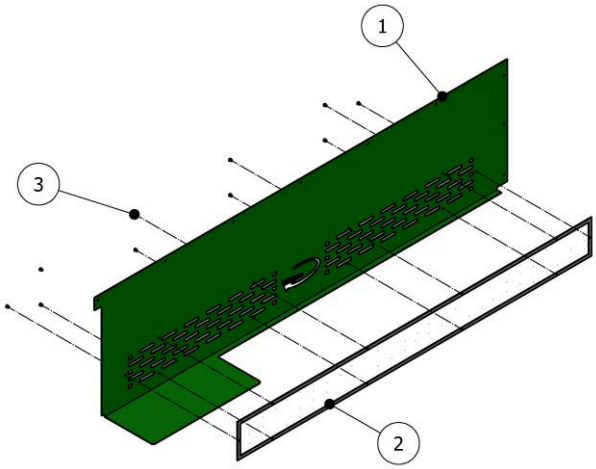

Figure 9. ***Left Upper Guard***

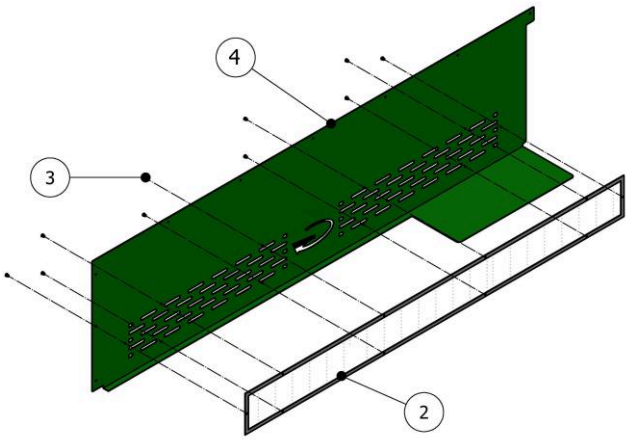

Figure 10. ***Right Upper Guard***

Table 11. Upper Guard Components List

Pos.	Description	Reference	Amt.
1	Left Upper Guard	MQ-12027-01-NG	1
2	Filter	MQ-12026-02	1 – 1
3	Rivet	TN-00372	10–10
4	Right Upper Guard	MQ-12026-01-NG	1

Left Removable Guard

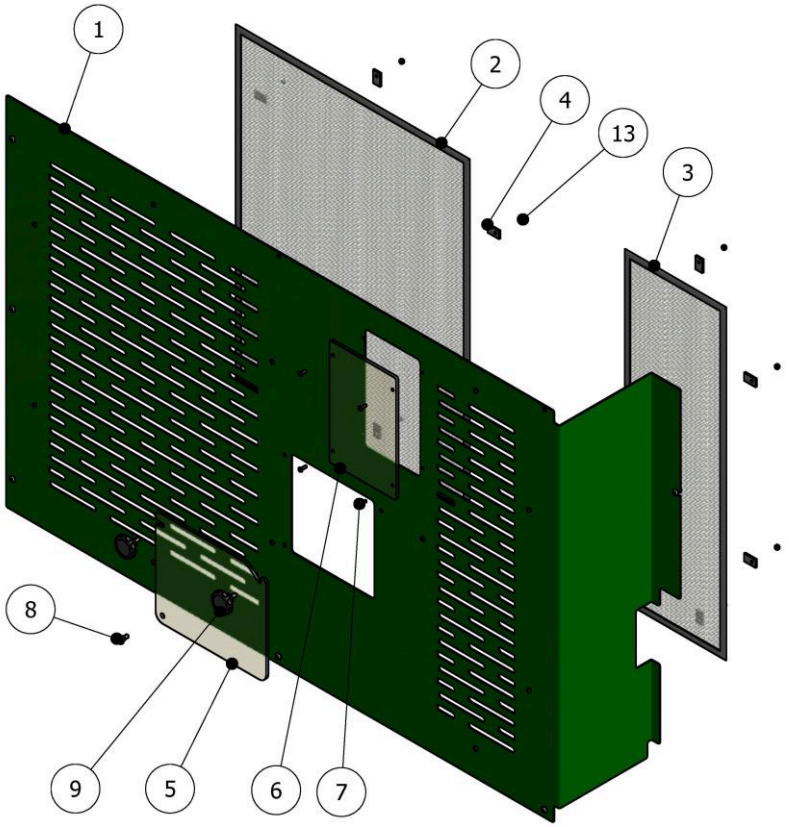

Figure 11. ***Left Side Guard***

Table 12. Left Side Guard Components List

Pos.	Description	Reference	Amt.
1	Left Side Guard Weld	MQ-12029-01-NG	1
2	Large Filter	MQ-12029-02	1
3	Small Filter	MQ-12029-03	1
4	Filter Clip	MQ-12028-03	11
5	Oil Level Hatch	MQ-12029-05	1
6	Diesel Filter Window	MQ-12029-04	1
7	Bolt	TN-00143	4
8	Shaft Bolt	TN-00331	1
9	Male Knob	TN-00434	2
13	Nut	TN-00312	11

Right Removable Guard

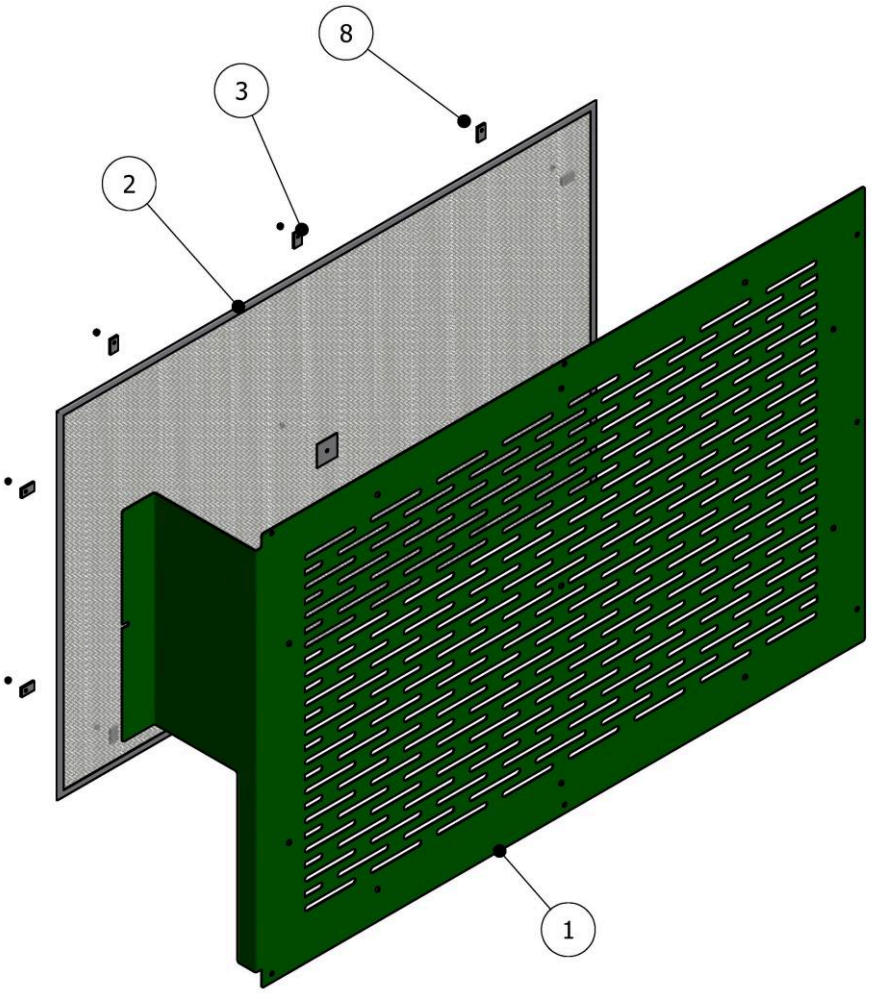

Figure 12. ***Right Side Guard***

Table 13. Right Side Guard Components List

Pos.	Description	Reference	Amt.
1	Right Side Guard Weld	MQ-12028-01-NG	1
2	Filter	MQ-12028-02	1
3	Filter Clip	MQ-12028-03	10
4	Hex Nut	TN-00312	11

Rear Guard

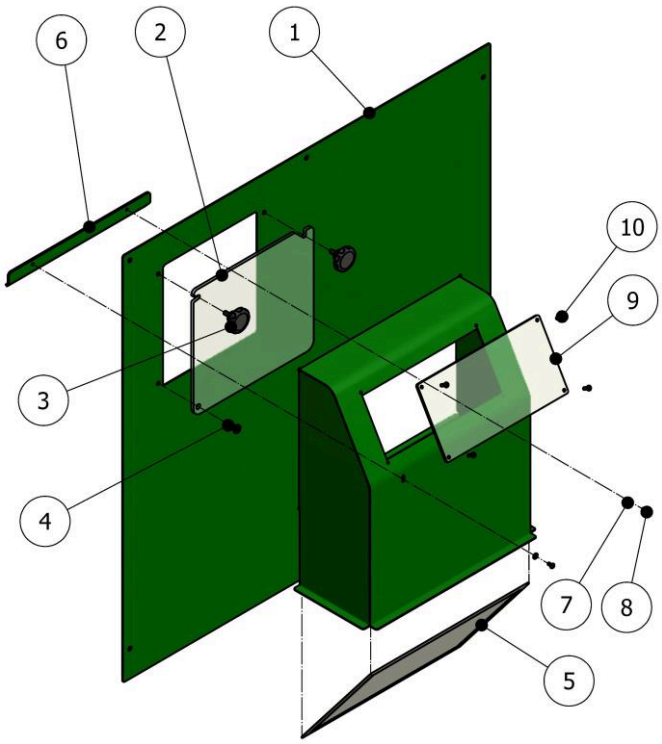

Figure 13. ***Rear Guard***

Table 14. Rear Guard Components List

Pos.	Description	Reference	Amt.
1	Rear Guard	MQ-12025-01-NG	1
2	Chute	MQ-12025-02	1
3	Male Knob	TN-00434	2
4	Shaft Bolt	TN-00331	1
5	Radiator Suction Filter	MQ-12025-04	1
6	Filter Clip	MQ-12025-03-NG	1
7	Washer	TN-00104	2
8	Bolt	TN-00031	2
9	Radiator Window	MQ-12025-05	1
10	Bolt	TN-00143	4

AIRLOCK DISPENSING UNIT

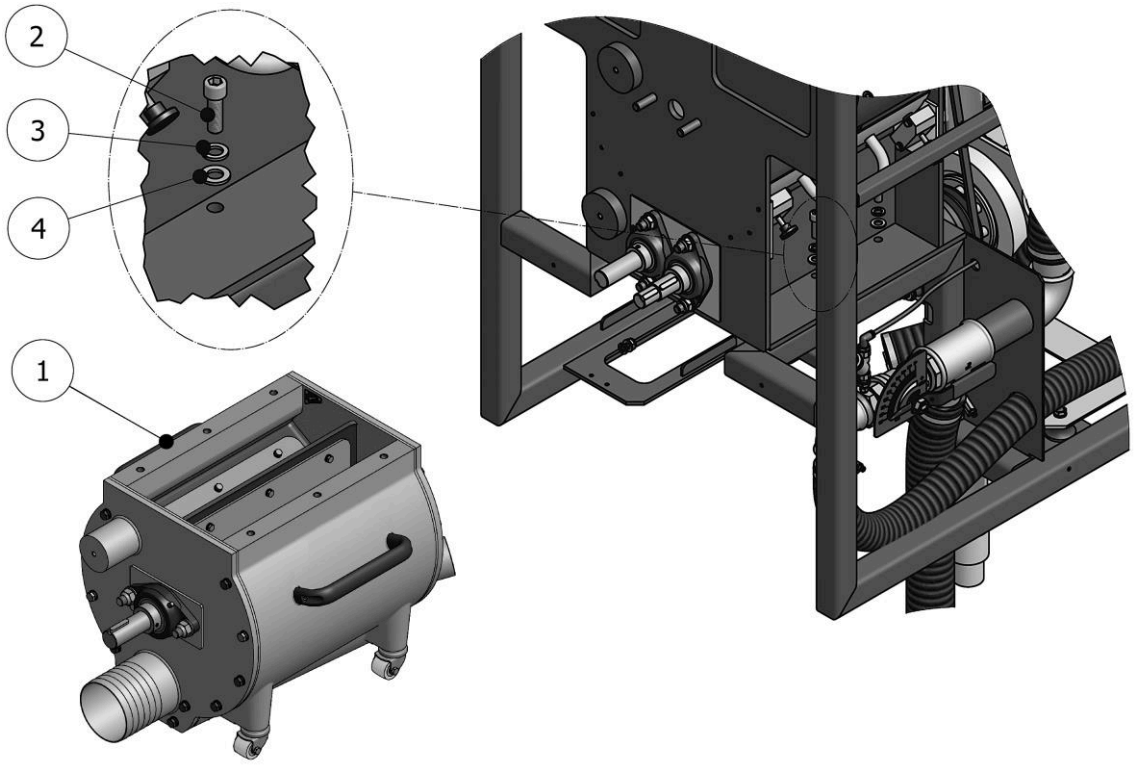

Figure 14. ***Airlock Dispensing Unit Assembly***

Table 15. Airlock Assembly Components List

Pos.	Description	Reference	Amt.
1	Airlock Dispensing Unit	MQ-12003-M-NG	1
2	Bolt	TN-00053	6
3	Washer	TN-00039	6
4	Washer	TN-00040	6

Airlock Dispenser Explosion System

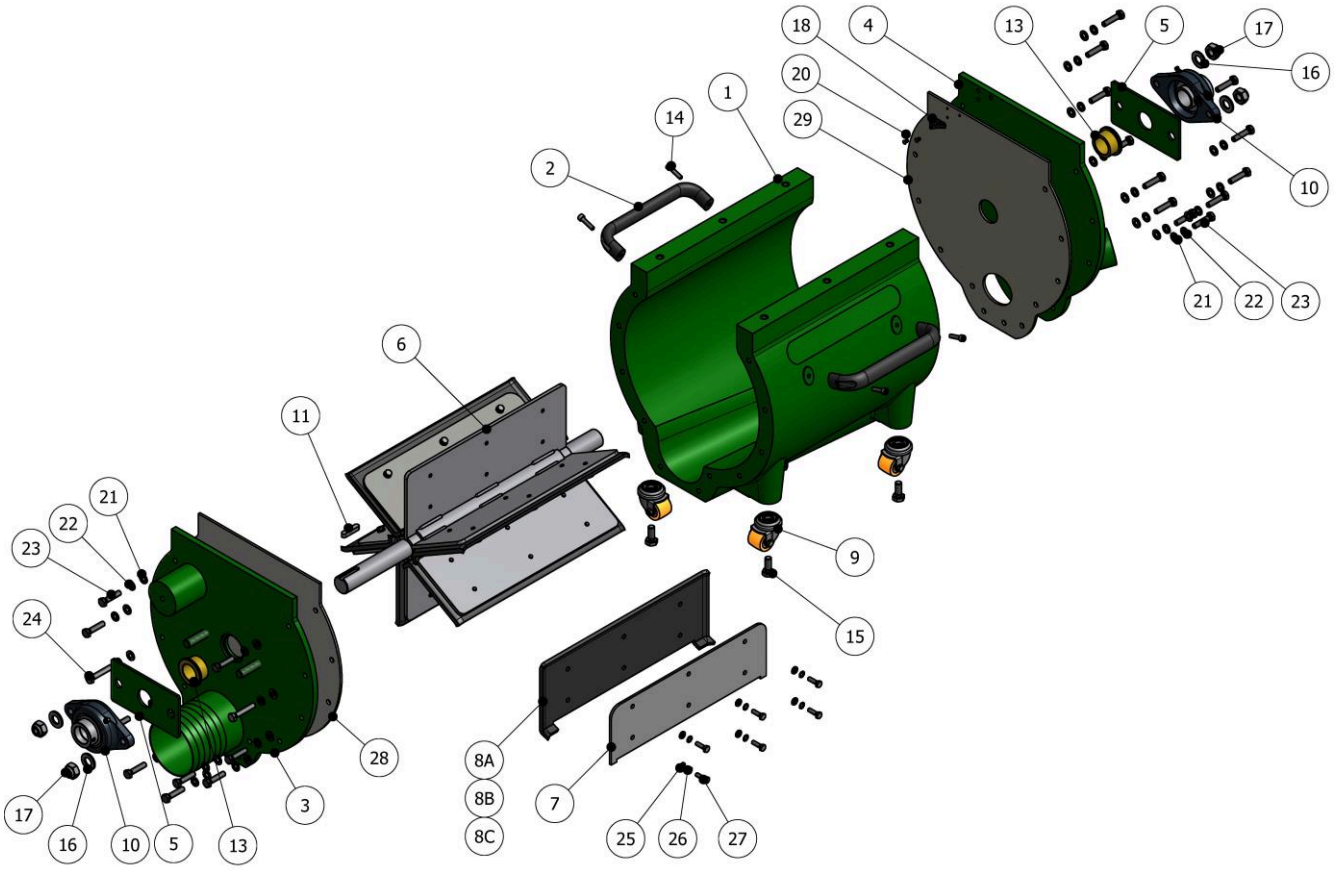

Figure 15. ***Airlock Dispenser Explosion System***

Table 16. Airlock Components List

Pos.	Description	Reference	Amt.
1	Airlock Dispenser Body Unit	MQ-12003-01MF-NG	1
2	Handle	MQ-12259	2
3	Front Cover	MQ-12003-02MM-NG	1
4	Rear Cover	MQ-12003-03MM-NG	1
5	Bushing Stop Plate	MQ-12003-05-NG	2
6	Dispenser Shaft Unit	MQ-12003-07	1
7	Rubber Fixing Plate	MQ-12003-08	6

Continued on next page

Continued from previous page

Pos.	Description	Reference	Amt.
8	Dispenser Blade Seals	See Table 17	-
9	Wheel	MQ-12200	4
10	Support with Bearing	TN-00344	2
	Oiler (include in Pos.10) @	TN-00073	2
11	Key	TN-00337	1
13	Shaft Bushing	MQ-12003-06	2
14	Allen Bolt	TN-00169	4
15	Hex Bolt	TN-00189	4
16	Washer	TN-00132	4
17	Nut	TN-000342	4
18	LH Directional Plate	MQ-12003-11	1
20	Rivet	TN-00352	3
21	Washer	TN-00119	23
22	Washer	TN-00028	23
23	Hex. Bolt	TN-00054	21
24	Hex. Bolt	TN-00051	2
25	Washer	TN-00024	36
26	Washer	TN-00048	36
27	Hex. Bolt	TN-00276	36
28	Front Anti-wear Plate	MQ-12003-02DM	1
29	Rear Anti-wear Plate	MQ-12003-03CM	1

@ Not supplied separately.

Table 17. Blade Seal Models

Pos.	Description	Reference	Amt.
8 A	Reinforced Rubber Dispenser Blade Seal	MQ-12003-09A	6
8 B	90 Shore Polyurethane Dispenser Blade Seal (Opt.)	MQ-12003-09B	6
8 C	45 Shore Virgin Rubber Dispenser Blade Seal (Opt.)	MQ-12003-09C	6

ENGINE COOLING CIRCUIT

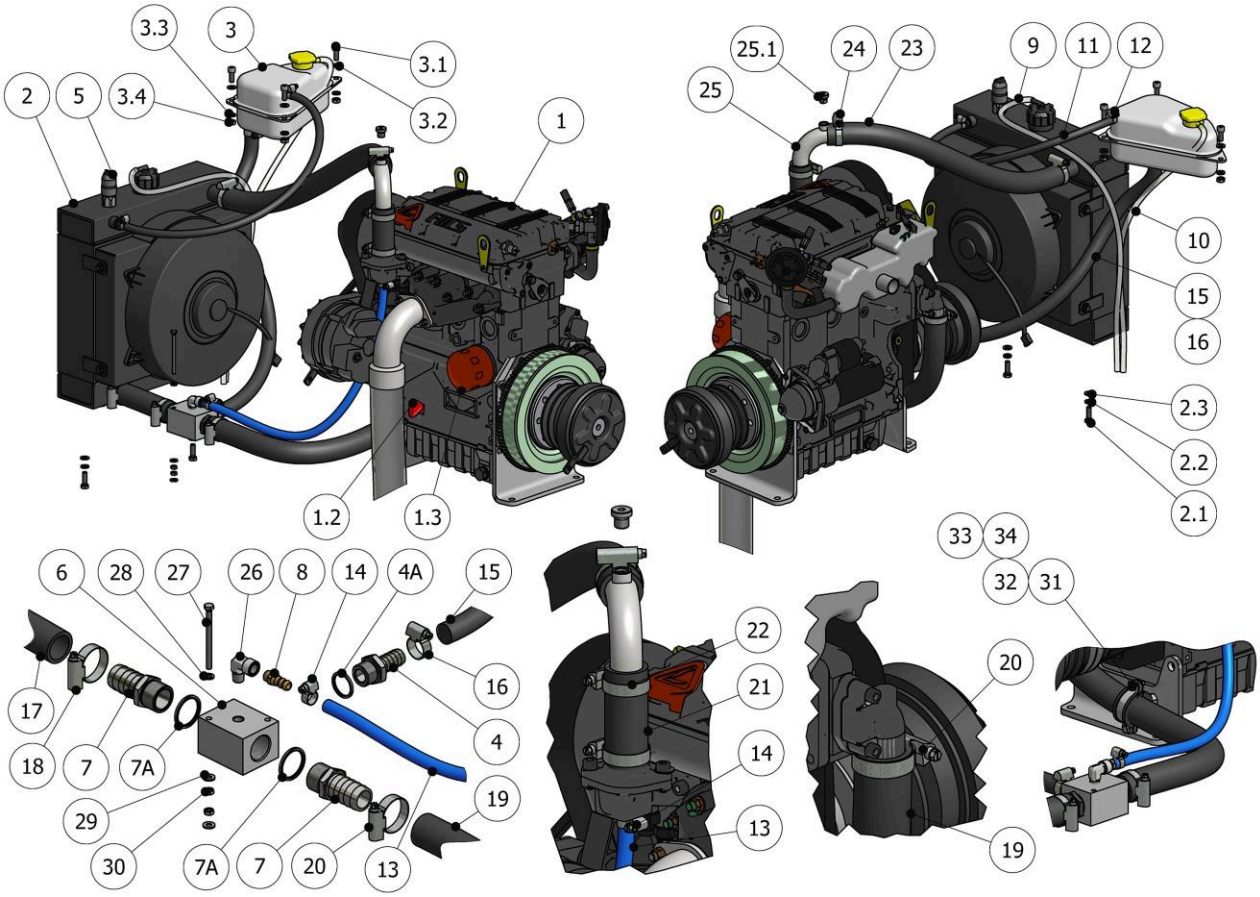

Figure 16. ***Engine Cooling Circuit***

Table 18. Cooling Circuit Components List

Pos.	Description	Reference	Amt.
1	Engine Unit	MQ-12201	1
1.2	Oil Dipstick (included in Pos. 1) **(@)**	-	1
1.3	Oil Filter (included in Pos. 1)	HI-00106	1
2	Radiator Unit	MQ-12205	1
2.1	Radiator Fixing Hex Bolt	TN-00146	2
2.2	Radiator Fixing Washer	TN-00028	2
2.3	Radiator Fixing Washer	TN-00119	2

Continued on next page. (@) Parts not supplied separately.

3	Expansion Vessel Unit	MQ-12205-01	1
3.1	Expansion Vessel Fixing Allen Bolt	TN-00176	3
3.2	Expansion Vessel Fixing Washer	TN-00119	3
3.3	Expansion Vessel Fixing Washer	TN-00028	3
3.4	Expansion Vessel Fixing Hex Bolt	TN-00029	3
4	Straight Hose Fitting	RA-00463	1
4A	Metall Ring	OR-00082	1
5	Contact Thermostat	EL-00006-01	1
6	Manifold	MQ-12064	1
7	Straight Hose Fitting	RA-00462	2
7A	Metall Ring	OR-00061	2
8	Straight Hose Fitting	RA-00409	1
9	Radiator Drain Tube.	MA-00068	0.8 m
10	Expansion Vessel Drain Tube.	MA-00068	0.7 m
11	Radiator-Expansion Vessel Hose	MA-00139	0.8 m
12	Mikalor Flange	TN-00357	2
13	Thermostat-Radiator Output Hose	MA-00134	0.7 m
14	Mikalor Flange	TN-00357	2
15	Expansion Vessel-Radiator Output Hose	MA-00132	0.7 m
16	Mikalor Flange	TN-00364	2
17	Radiator Output-Bypass Hose	MA-00133	0.15 m
18	Mikalor Flange	TN-00365	2
19	Bypass-Engine Water Pump Hose	MA-00133	0.7 m
20	Mikalor Flange	TN-00365	2
21	Contact Thermostat-Radiator Input Hose	MA-00133	0.1 m
22	Mikalor Flange	TN-00365	2
23	Engine Thermostat-Contact Thermostat Hose	MA-00133	0.62m
24	Mikalor Flange	TN-00365	2

25	Elbow Hose Fitting	MQ-12258	1
25A	Plug	RA-00461	1
26	Elbow	RA-00408	1
27	Hex. Bolt	-	1
28	Washer	TN-00025	1
29	Washer	TN-00048	2
30	Nut	TN-00108	2
31	Clamp	TN-00432	1
32	Hex. Bolt	TN-00146	1
33	Flat Washer	TN-00119	1
34	AET Washer	TN-00038	1

FUEL CIRCUIT

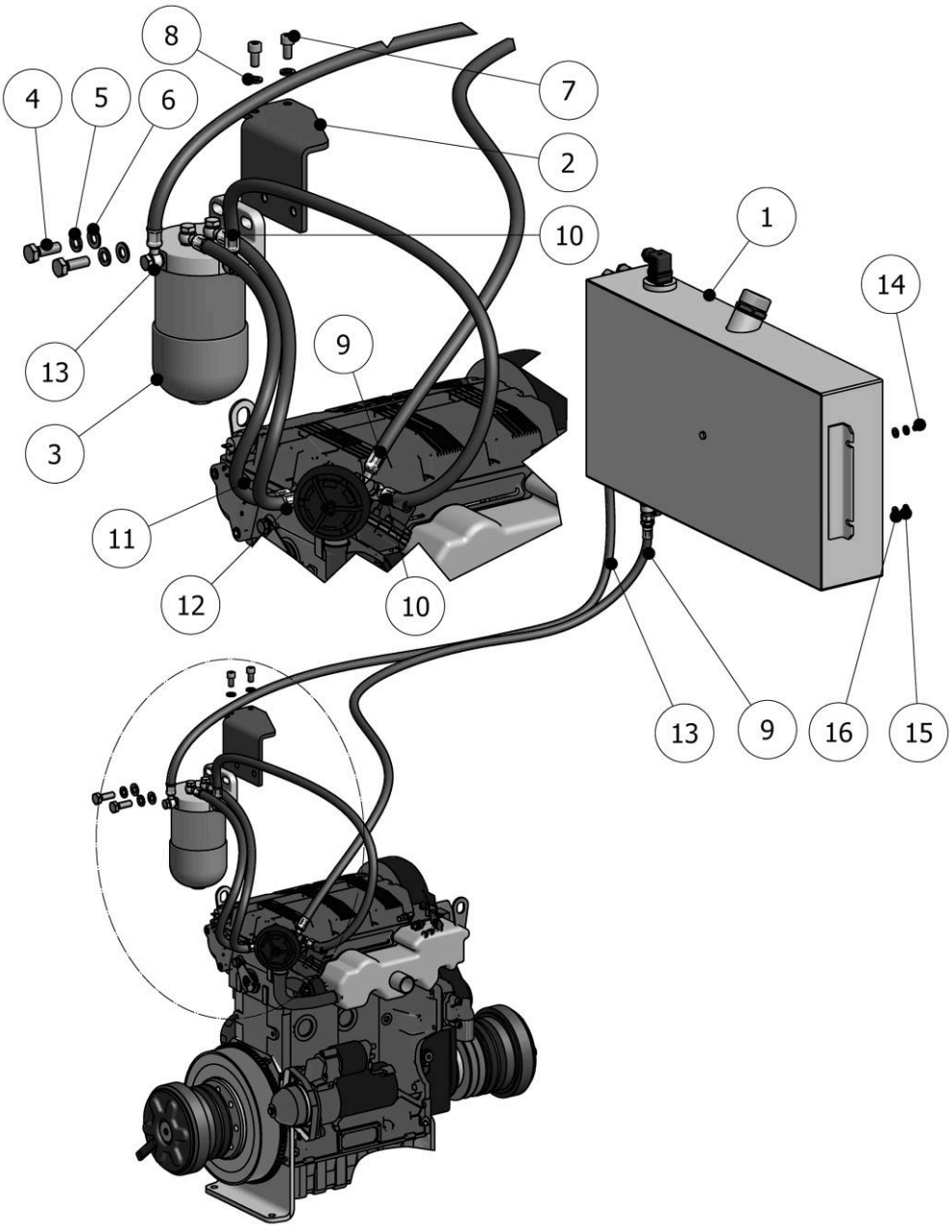

Figure 17. ***Engine Fuel Circuit***

Table 19. Engine Fuel Circuit Components List

Pos.	Description	Reference	Amt.
1	Tank Unit	MQ-12021-CJTO-A-NG	1
2	Diesel Filter Support	MQ-12037	1
3	Diesel Filter (included in Engine Unit MQ-12201)	HI-00107	1
4	Hex Bolt	TN-00129	2
5	Washer	TN-00087	2
6	Washer	TN-00162	2
7	Allen Bolt	TN-00186	2
8	Washer	TN-00119	2
9	Tank-Fuel Pump Flow Hose	MA-00128	1.35 m
10	Pump-Fuel Filter Flow Hose	MA-00128	0.75 m
11	Filter-Engine Injection Hose	MA-00128	0.53 m
12	Engine-Fuel Filter Return Hose	MA-00128	0.53 m
13	Filter-Fuel Tank Return Hose	MA-00128	1.46 m
14	Hex Bolt	TN-00187	4
15	Washer	TN-00028	4
16	Washer	TN-00119	4

Fuel Tank Explosion System

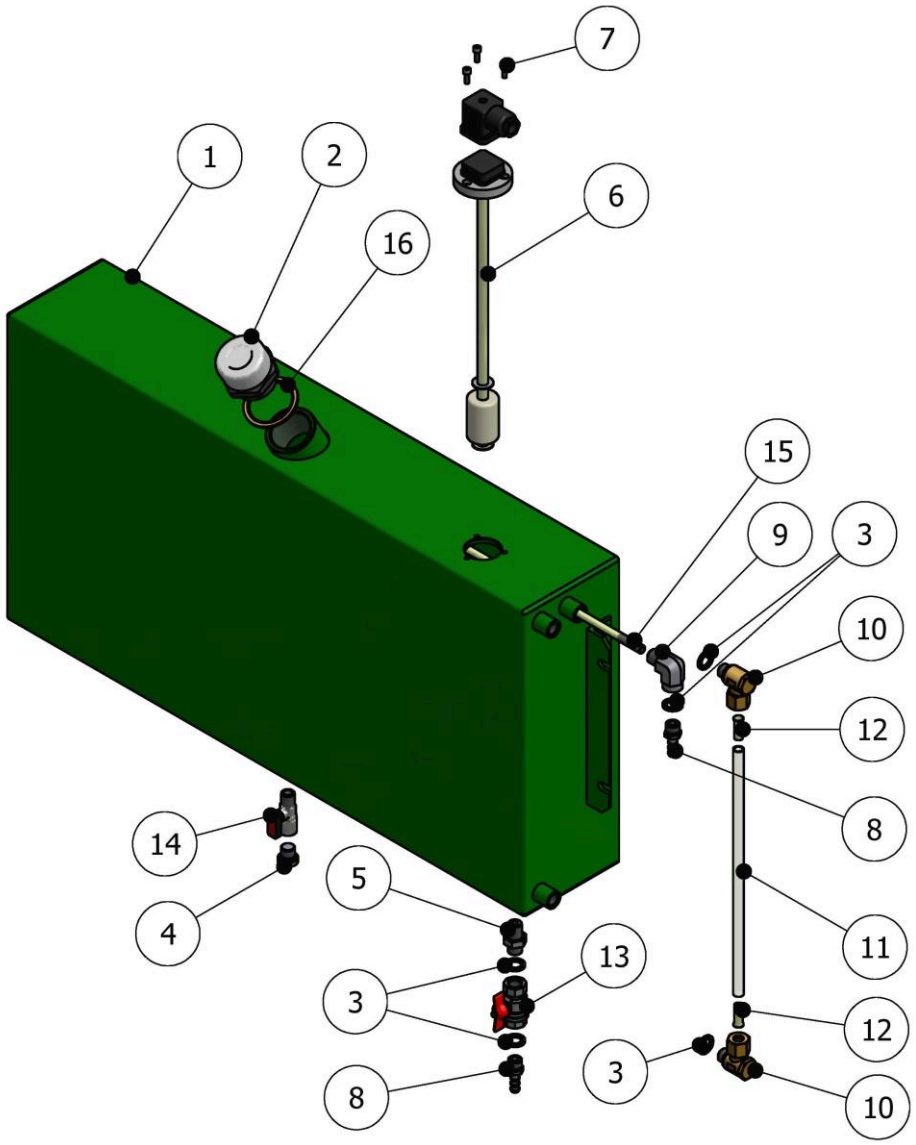

Figure 18. ***Fuel Tank Explosion System***

Table 20. Fuel Tank Components List

Pos.	Description	Reference	Amt.
1	Welded Diesel Tank Unit	MQ-12021-00A-NG	1
2	Tank Cap	MQ-12021-10	1
3	Dual Material Seal	OR-00054	3
4	Male Plug	RA-00013	1
5	Threaded Connector	RA-00102	1
6	Level Sensor Unit	HI-00111	1
7	Allen Bolt	TN-00049	3
8A	Flow Hose	MA-00128	1
8B	Return Hose	MA-00128	1
9	90º Elbow	RA-00416-M	1
10	Banjo Connector	RA-00377	2
11	Transparent Polyamide Tube	MA-00024	0.28m
12	Interior Reinforcement	RA-00378	2
13	Ball Valve	RA-00325	1
14	Ball Valve	RA-00265	1
15	Comeback Pipe	MQ-12021-11	1
16	Dual Material Seal	OR-00088	1
17	Seal	OR-00139	4

TRANSMISSION

Exterior Transmission Explosion System

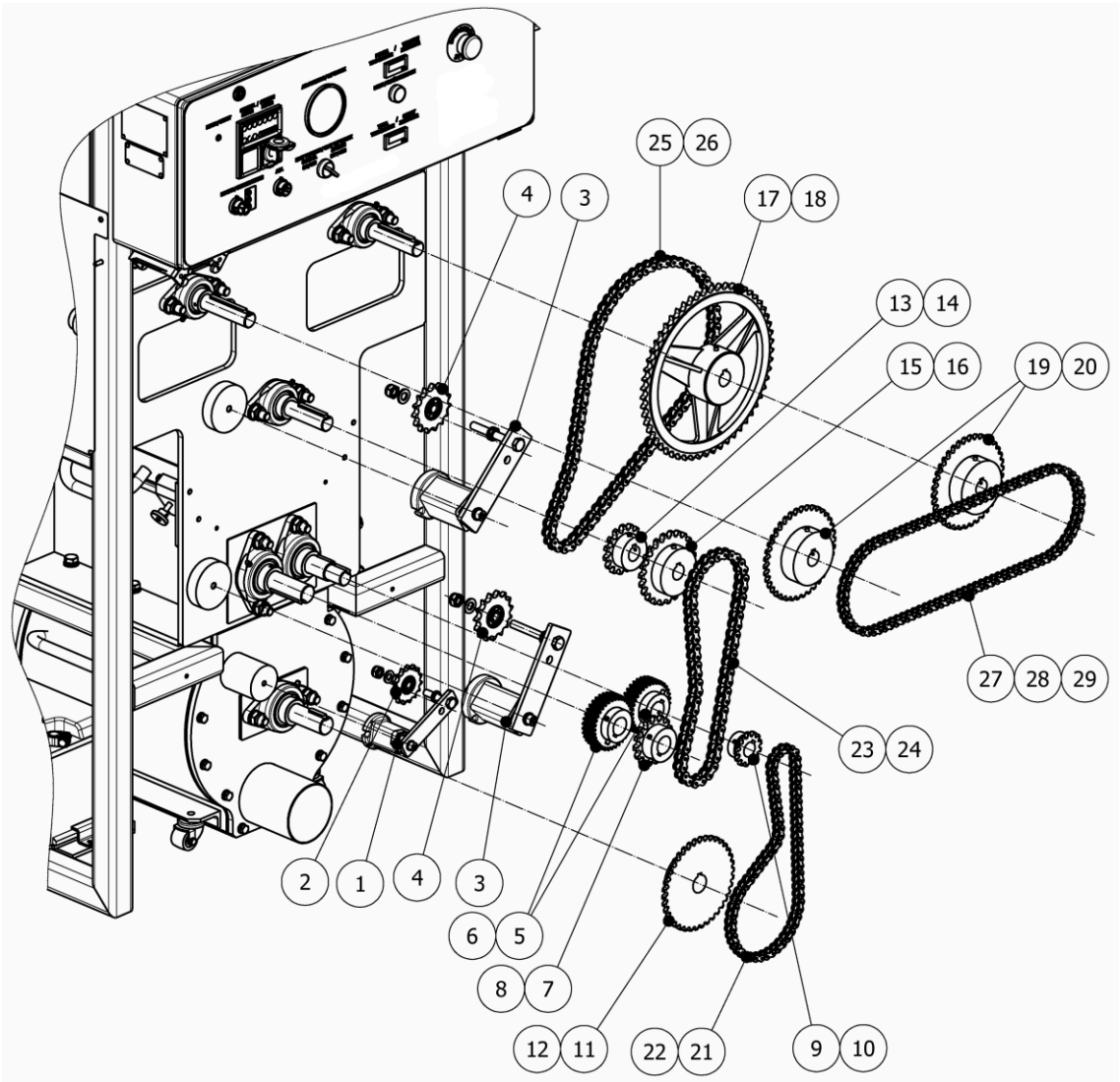

Figure 19. ***Exterior Transmission Explosion System***

Table 21. Exterior Transmission Components List

Pos.	Description	Reference	Amt.
1	Chain Tightener Unit 1/2”·	MQ-12227	1
2	Chain Tightener Pinion Unit 1/2”	MQ-12228	1
3	Chain Tightener Unit 5/8”	MQ-12225	2
4	Chain Tightener Pinion Unit 5/8”	MQ-12226	2
5	Gear Wheel	MQ-12217	2
6	Set Screw	TN-00358	4
7	Chain Pinion 5/8”	MQ-12212	1
8	Set Screw	TN-00358	2
9	Chain Pinion 1/2”	MQ-12216	1
10	Set Screw	TN-00359	2
11	Chain Pinion 1/2”	MQ-12214	1
12	Set Screw	TN-00360	2
13	Chain Pinion 5/8”	MQ-12213	1
14	Set Screw	TN-00358	2
15	Chain Pinion 5/8”	MQ-12211A	1
16	Set Screw	TN-00360	2
17	Chain Pinion 5/8”	MQ-12210	1
18	Set Screw	TN-00361	2
19	Chain Pinion 1/2”	MQ-12215	2
20	Set Screw	TN-00361	4
21	Chain 1/2”	MQ-12224	1
22	Chain Joint 1/2”	MQ-12251	1
23	Chain 5/8”	MQ-12222	1
24	Chain Joint 5/8”	MQ-12252	1
25	Chain 5/8”	MQ-12221	1
26	Chain Joint 5/8”	MQ-12252	1
27	Chain 1/2”	MQ-12223	1
28	Chain Half Link 1/2”	MQ-12223-UN	1
29	Chain Joint 1/2”	MQ-12251	1

Chain Tensioners Detail

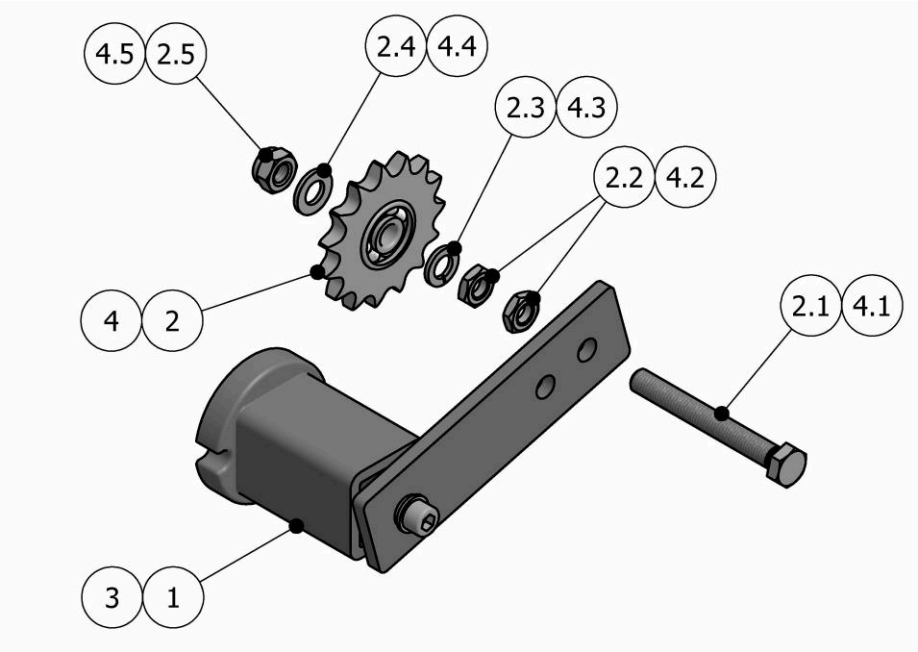

Figure 20. ***Chain Tensioners Detail***

Table 22. Chain Tensioners Detail, Parts List

Pos.	Description		Reference	Qty.
1	Tensioner Device for chain 1/2”		MQ-12227	1
2	Sprocket Wheel Set for chain 1/2”		MQ-12228	1
2.1	Hex. Bolt (Included in Pos.2)	**(@)**	-	1
2.2	Nut (Included in Pos.2)	**(@)**	-	2
2.3	Washer		TN-00145	1
2.4	Washer		TN-00162	1
2.5	Lock Nut		TN-00265	1
3	Tensioner Device for chain 5/8”		MQ-12225	2
4	Sprocket Wheel Set for chain 5/8”		MQ-12226	2
4.1	Hex. Bolt		TN-00396	1 (*)
4.2	Nut (Included in Pos.4)	**(@)**	-	1 (*)
4.3	Washer		TN-00015	1 (*)
4.4	Washer		TN-00040	1 (*)
4.5	Lock Nut		TN-00030	1 (*)

(*) Quantities for one set. (@) Parts not supplied separately.

Interior Transmission Explosion System

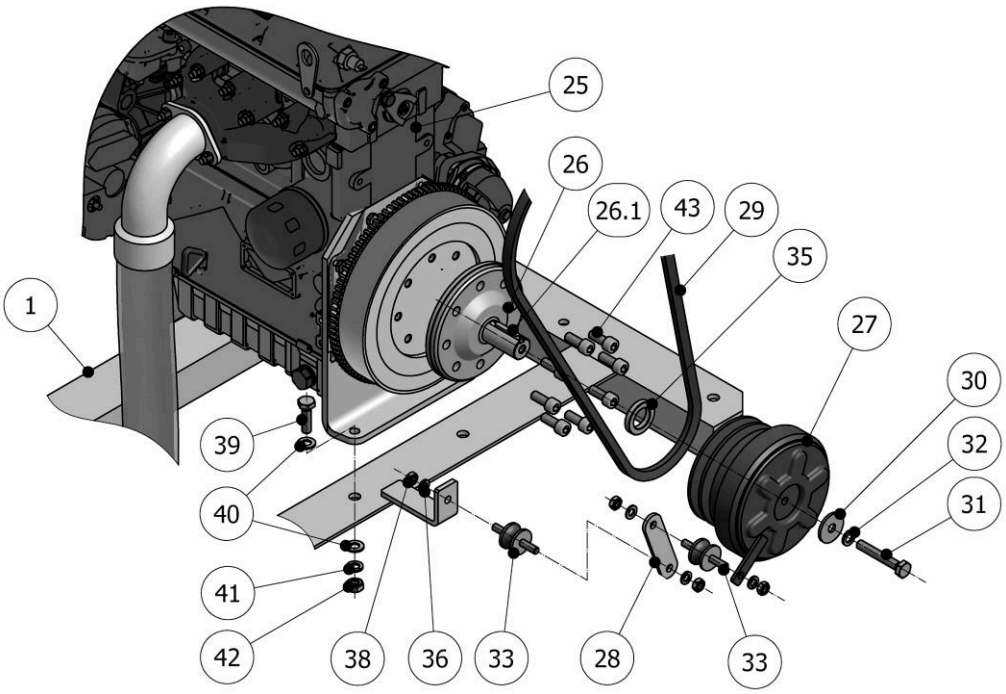

Figure 21. ***Primary Engine Transmission Explosion System***

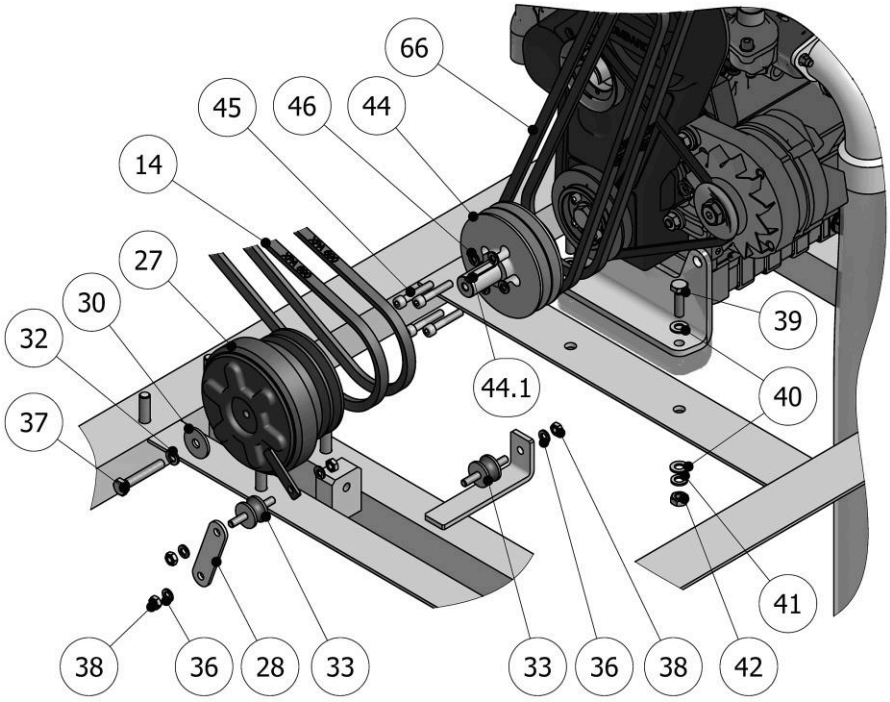

Figure 22. ***Secondary Engine Transmission Explosion System***

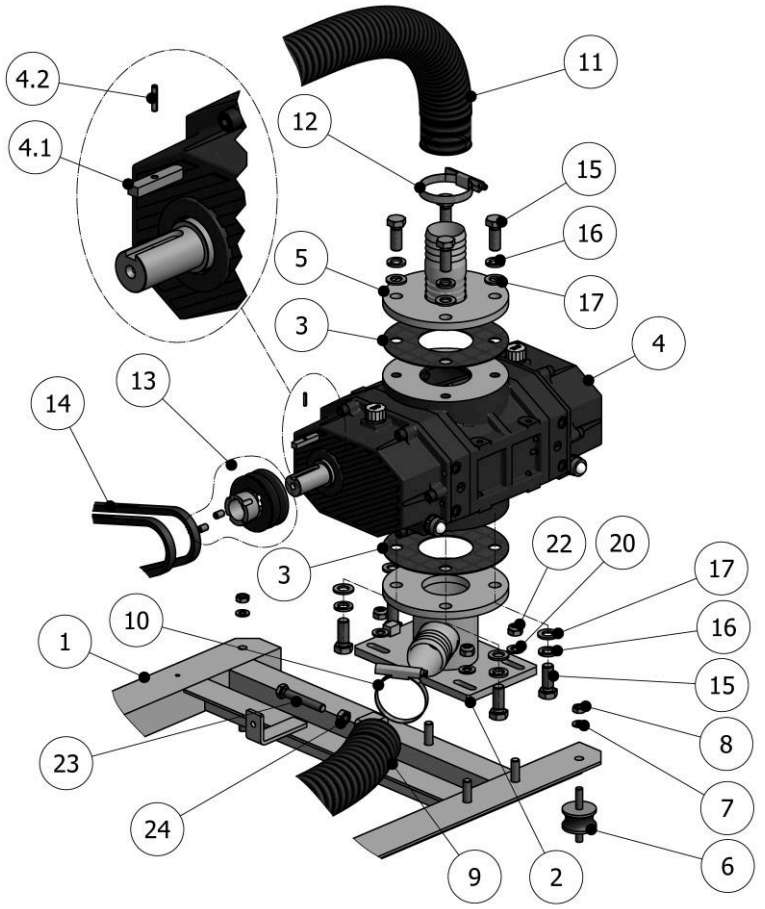

Figure 23. ***Blower Transmission Explosion System***

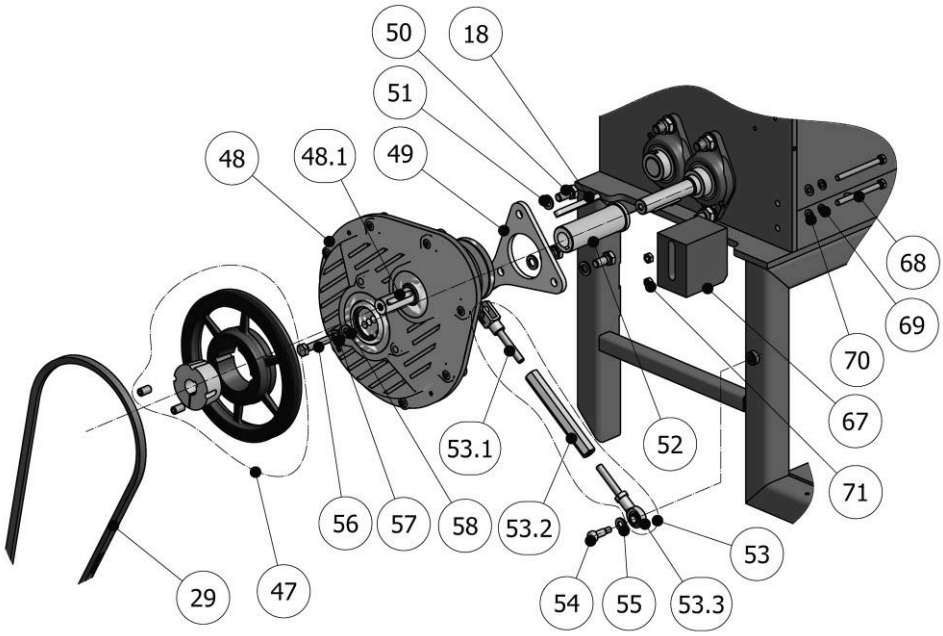

Figure 24. ***Explosión Transmisión Reductor Pendular***

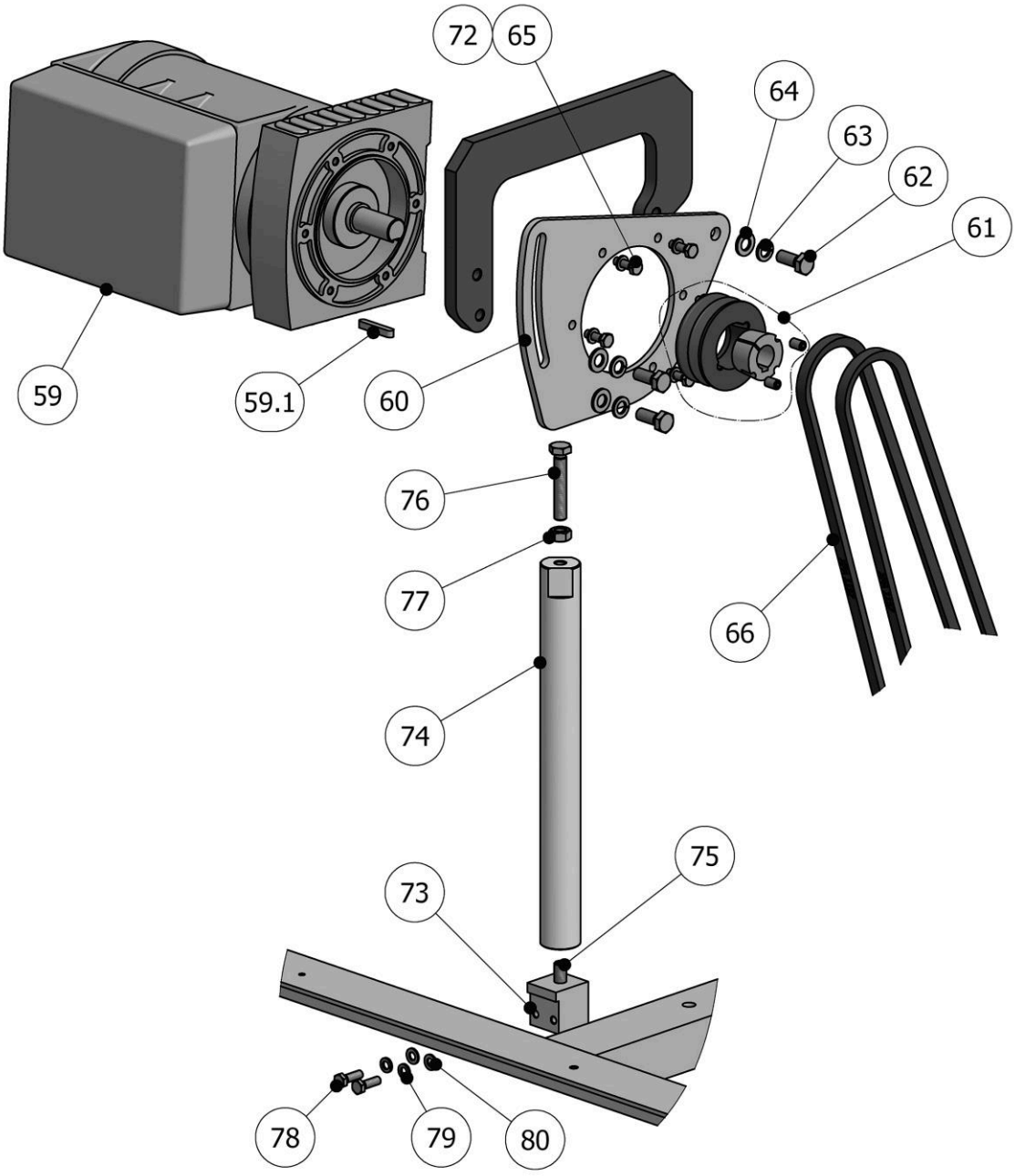

Figure 25. ***Alternator Transmission Explosion System (Optional)***

Table 23. Interior Transmission Components List

Pos.	Description	Reference	Amt.
1	Engine Mount Unit	MQ-12002-00-NG	1
2	Blower Support Unit	MQ-12020-00-NG	1
3	Blower Flange Seal	MQ-12033	2
4	Blower	MQ-12203-01-NG	1
4.1	Key (Included in Pos.4) **(@)**	-	1
4.2	Pin (Included in Pos.4)	TN-00084	1
5	Blower Input Flange	MQ-12022-00-NG	1
6	Silenbloc	TN-00345	4
7	Washer	TN-00087	4
8	Hex Nut	TN-00105	4
9	Compressed Air Duct	MA-00131	0.38m
10	Mikalor Flange	TN-00368	2
11	Suction Air Duct	MA-00131	1.30m
12	Mikalor Flange	TN-00368	2
13	Blower Pulley Unit	MQ-12256	1
14	Blower Belt	MQ-12257	2
15	Hex Bolt	TN-00095	8
16	Washer	TN-00044	8
17	Washer	TN-00045	8
18	Key	TN-00341	1
20	Washer	TN-00040	4
22	Hex Nut	TN-00030	4
23	Hex Bolt	TN-00122	1
24	Hex Nut	TN-00023	1
25	Engine Unit	MQ-12201	1
26	Engine Output Primary Shaft (Included in Pos. 25)	MQ-12201-01D	1
26.1	Key (Included in Pos. 26)	MP-00057	45mm
27	Clutch	MQ-12202	2
28	Clutch Support Strip	MQ-12007-NG	2
29	Reducer Belt	MQ-12209	1

(@) Parts not supplied separately.

Pos.	Description	Reference	Amt.
30	Clutch Stop Washer	MQ-12057	2
31	Hex Bolt	TN-	1
32	Washer	TN-00087	2
33	Silenbloc	TN-00346	4
35	Washer	MQ-12059-A	1
36	Washer	TN-00028	8
37	Hex. Bolt Theard LH	MQ-12255	1
38	Hex Nut	TN-00029	8
39	Hex Bolt	TN-00163	4
40	Washer	TN-00162	8
41	Washer	TN-00087	4
42	Hex Nut	TN-00165	4
43	Allen Bolt (Included in Pos.25)	TN-00189	8
44	Secondary Engine Output Shaft	MQ-12017-D	1
44.1	Key (Included in Pos. 44)	MP-00057	40mm
45	Allen Bolt	TN-00282	4
46	Washer	TN-00028	4
47	Reducer Pulley Unit	MQ-12206	1
48	Swinging Reducer	MQ-12204	1
48.1	Key (Included in Pos.48)	TN-00263	1
49	Tightening Flange	MQ-12019-NG	1
50	Hex Bolt	TN-00130	3
51	Washer	TN-00039	3
52	Reducer Output Shaft Extension	MQ-12016	1
53	Swinging Tightener Unit	MQ-12018-00	1
53.1	Tightening Fork (included in Pos. 53)	MQ-12018-03	1
53.2	Tightener Body (included in Pos. 53)	MQ-12018-01	1
53.3	Tightener Head (included in Pos. 53)	MQ-12018-02	1
54	Shaft Bolt	TN-00326	1
55	Washer	TN-00162	1
56	Hex Bolt	TN-00123	1
57	Washer	TN-00087	1

Pos.	Description	Reference	Amt.
58	Washer	TN-00162	1
59	Alternator Unit	MQ-12249	1 (*)
59.1	Key (included in Pos. 59)	TN-00339	1 (*)
60	Alternator Tightening Flange	MQ-12055-NG	1 (*)
61	Double Groove Pulley Unit	MQ-12245	1 (*)
62	Hex Bolt	TN-00060	3 (*)
63	Washer	TN-00039	3 (*)
64	Washer	TN-00040	3 (*)
65	Hex. Bolt	TN-00146	5 (*)
66	Alternator Belt	MQ-12246	2 (*)
67	Stopper Reducer	MQ-12061	1
68	Hex. Bolt	TN-00378	2
69	Washer	TN-00028	2
70	Washer	TN-00119	2
71	Nut	TN-00029	2
72	Washer	TN-00028	5 (*)
73	Support	MQ-12072-NG	1
74	Pilar	MQ-12071	1 (*)
75	Screw	TN-00398	1 (*)
76	Hex. Bolt	TN-00397	1 (*)
77	Nut	TN-00023	1 (*)
78	Hex. Bolt	TN-00146	2
79	Washer	TN-00028	2
80	Washer	TN-00119	2

Note:

Parts marked with (*) are for the optional machine version with auxiliary alternator.

AIR DUCTS

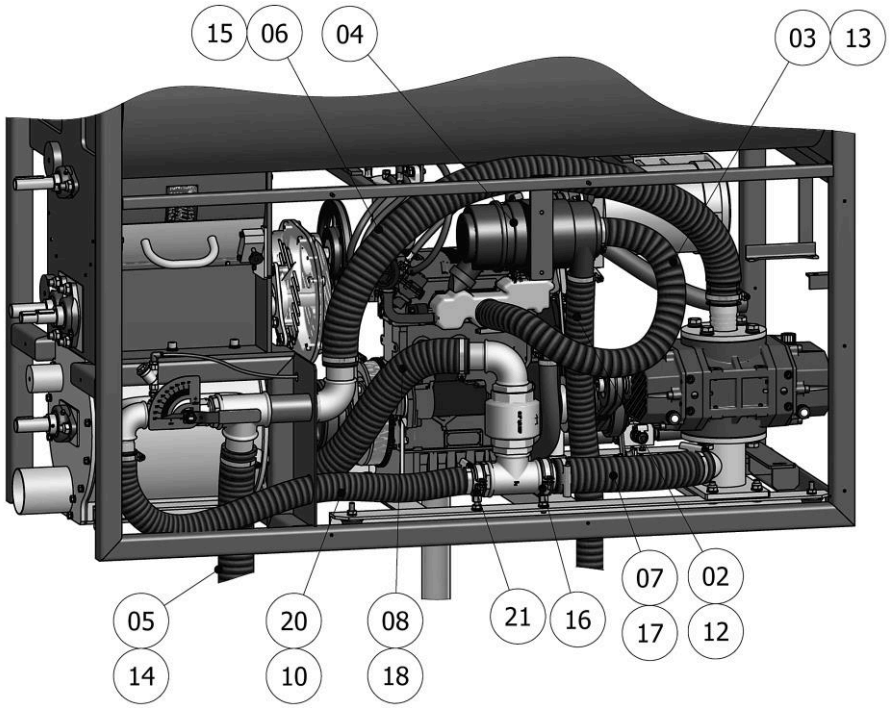

Figure 26. ***General Air Duct Assembly***

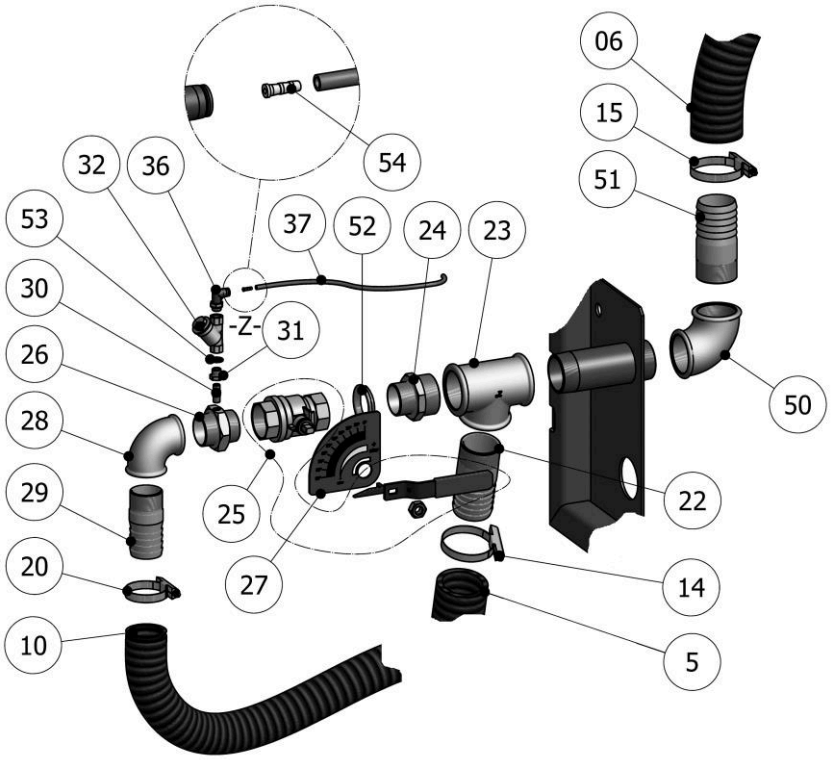

Figure 27. ***Detail of Air Control Assembly***

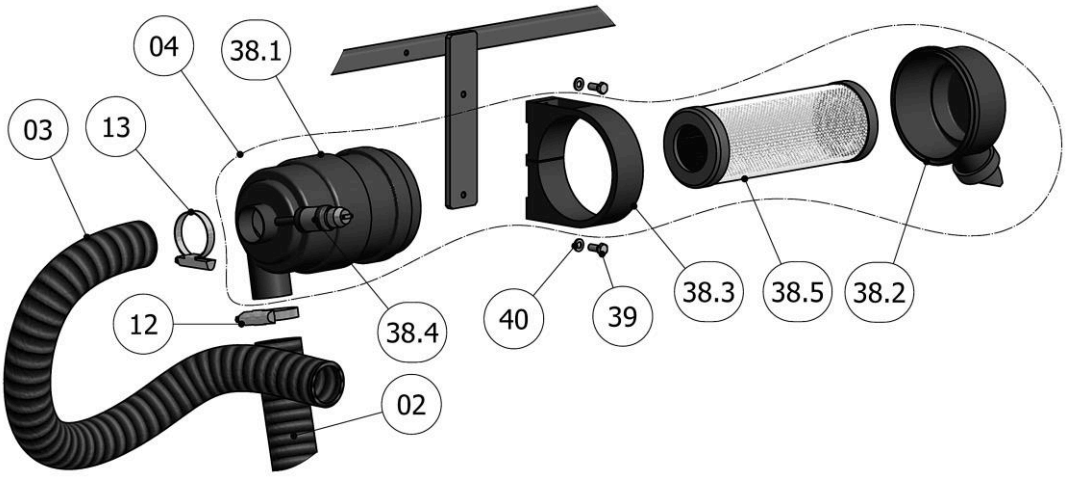

Figure 28. ***Detail of Air Filter Assembly***

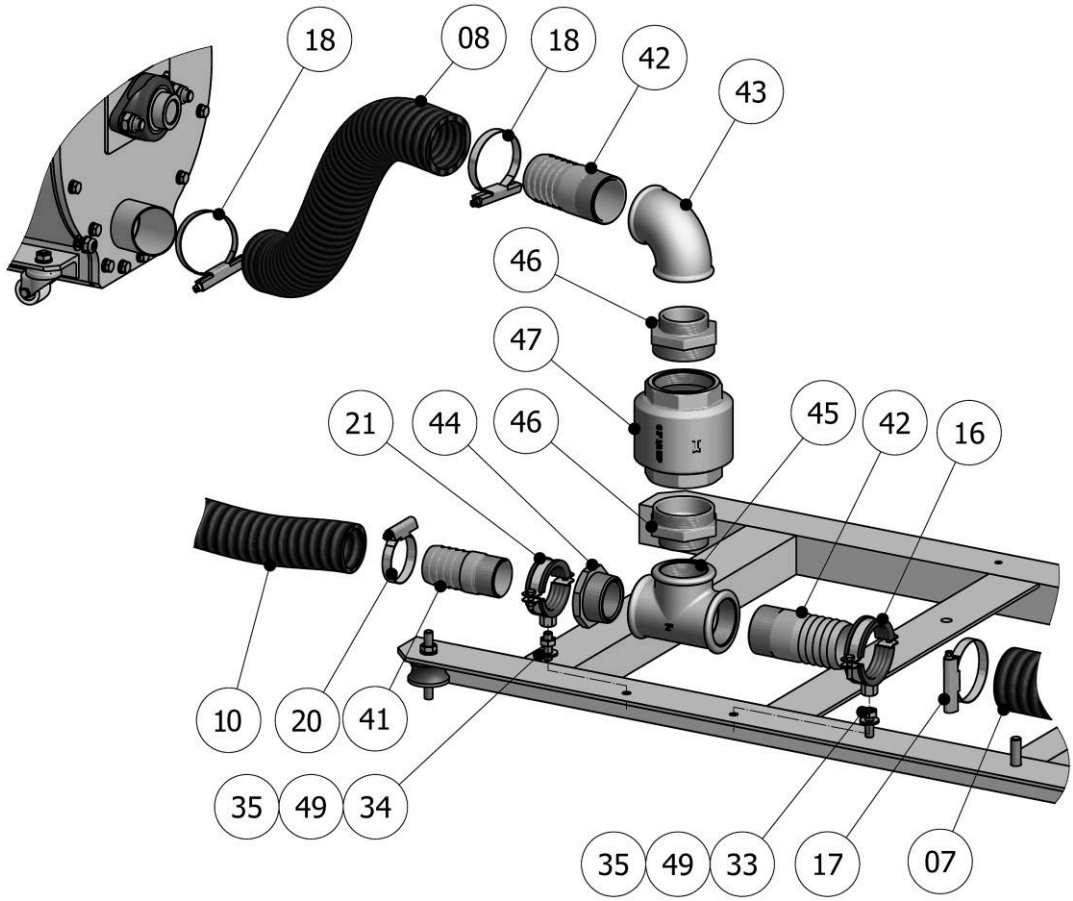

Figure 29. ***Detail of Pressure Line Assembly***

Table 24. Air Duct Components List

Pos.	Description	Reference	Amt.
1			
2	Suction Hose, Engine Air Section 1	MA-00130	0.70 m
3	Suction Hose, Engine Air Section 2	MA-00130	1.20 m
4	Engine Suction Filter Unit	HI-00108	1
5	Suction Hose, Blower Section 1	MA-00131	0.70 m
6	Suction Hose, Blower Section 2	MA-00131	1.30 m
7	Blower Output Hose	MA-00131	0.38 m
8	Airlock Feed Hose	MA-00131	0.58 m
9			
10	Recirculation Hose	MA-00130	0.85 m
11			
12	Mikalor Flange	TN-00353	1
13	Mikalor Flange	TN-00353	2
14	Mikalor Flange	TN-00368	1
15	Mikalor Flange	TN-00368	2
16	Flange	TN-00348	2
17	Mikalor Flange	TN-00368	2
18	Mikalor Flange	TN-00368	2
19			
20	Mikalor Flange	TN-00353	2
21	Flange	TN-00347	1
22	Straight Coupling	MQ-12242	1
23	T-connector	RA-00355	1
24	Reducer	RA-00358	1
25	Pressure Control Valve Unit	MQ-12047	1
26	Threaded Connector with Manometer Connection	MQ-12032	1
27	Control Scale	MQ-12046	1
28	90º Elbow	RA-00357	1
29	Straight Coupling	MQ-12241	1

Pos.	Description	Reference	Amt.
30	Threaded Connector	RA-00112	1
31	Reducer	RA-00371	1
32	Y-filter	RA-00372	1
33	Threaded Bolt	TN-00129	1
34	Threaded Bolt	TN-00129	1
35	Hex. Nut	TN-00105	2
36	Elbow	RA-00380	1
37	Pneumatic Tube	MA-00071	1
38.1	Filter Body (Included in Pos. 4) ***(*)***	-	1
38.2	Filter Cap (Included in Pos. 4) ***(*)***	-	1
38.3	Filter Flange (Included in Pos. 4) ***(*)***	-	1
38.4	Filter Sensor (Included in Pos. 4) ***(*)***	-	1
38.5	Air Filter (Included in Pos. 4) ***(*)***	-	1
39	Hex Bolt	TN-00187	2
40	Washer	TN-00119	2
41	Straight Coupling	MQ-12241	1
42	Straight Coupling	MQ-12242	2
43	90º Elbow	RA-00356	1
44	Reducer	RA-00359	1
45	T-connector	RA-00355	1
46	Threaded Connector	RA-00401	2
47	Non-Return Valve	RA-00402	1
48			
49	Washer	TN-00145	2
50	90º Elbow	RA-00356	1
51	Straight Coupling	MQ-12242	1
52	Nut	RA-00410	1
53	Seal	OR-00054	1
54	Reducer Bushing	MQ-12075	1

Note: Parts marked with (*) are not supplied separately.

SHAFTS

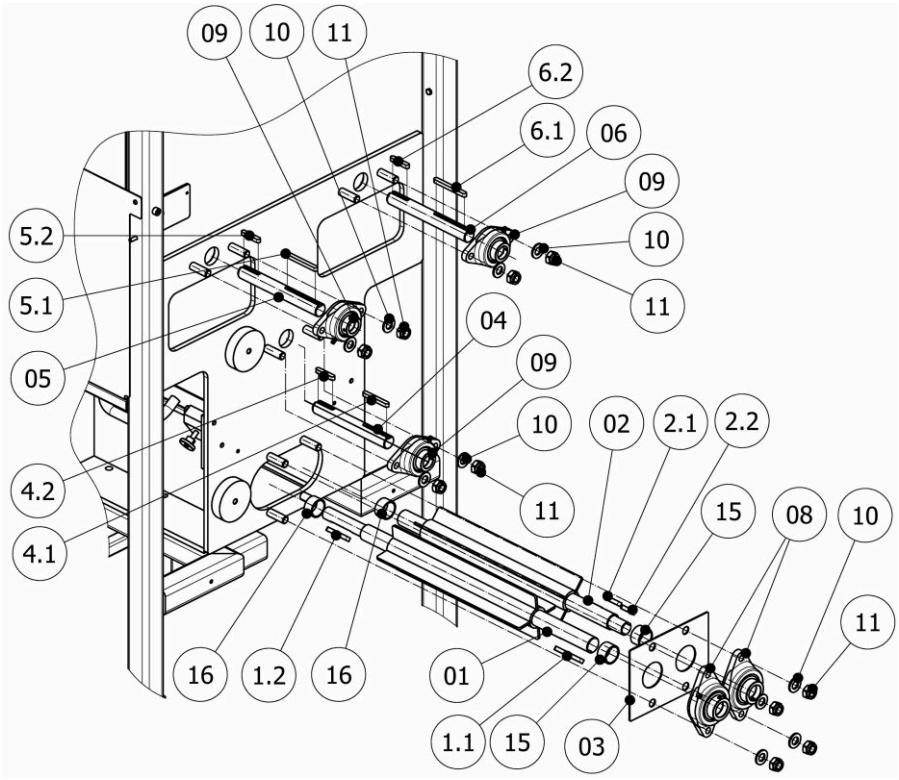

Figure 30. ***Front Side Shaft and Spindle Assembly***

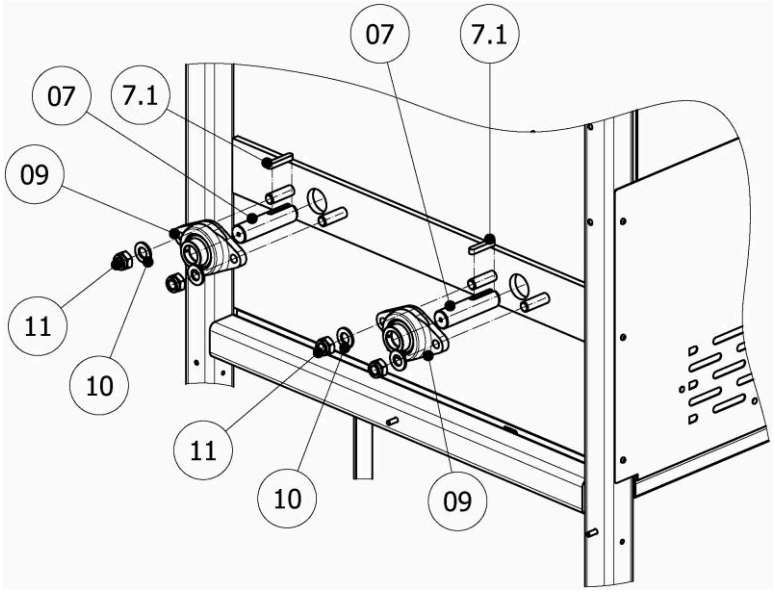

Figure 31. ***Rear Side Spindle Assembly***

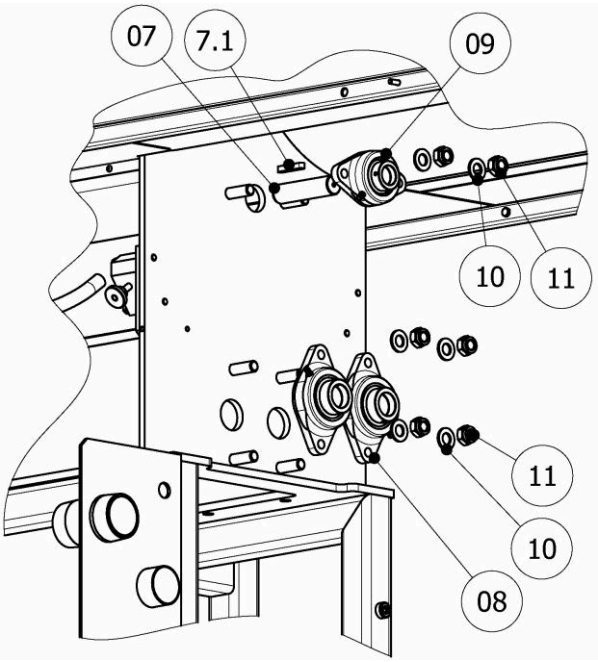

Figure 32. ***Rear Side Shaft Assembly***

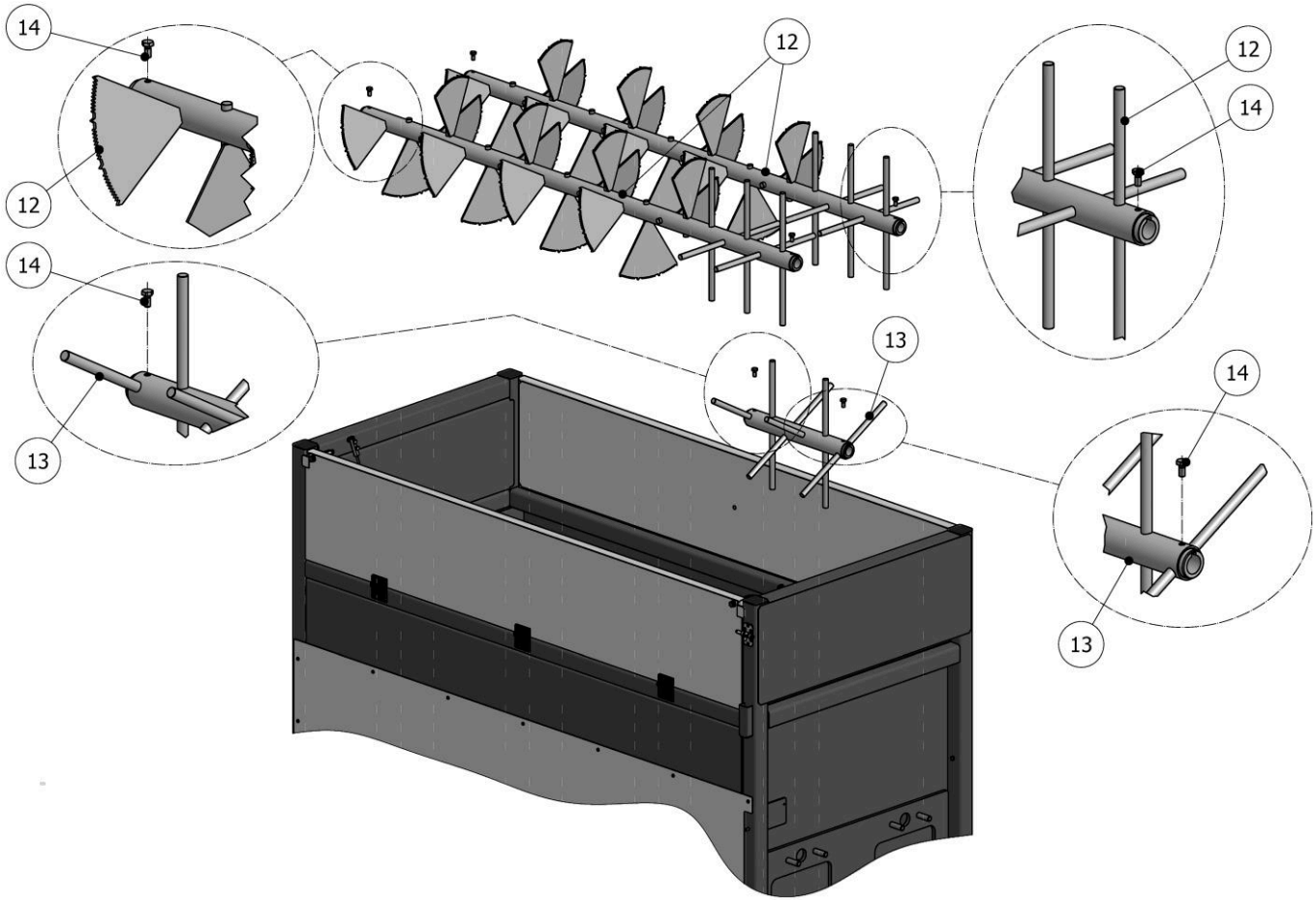

Figure 33. ***Carder Shaft Assembly***

Table 25. Shaft List

Pos.	Description	Reference	Amt.
1	Drive Blade Shaft Unit	MQ-12009-00	1
1.1	Key	TN-00340	1
1.2	Key	TN-00263	1
2	Driven Blade Shaft Unit	MQ-12008-00	1
2.1	Key	TN-00337	1
2.2	Key	TN-00336	1
3	Dispenser Cap	MQ-12005-NG	1
4	Front Central Carder Rod	MQ-12012	1
4.1	Key	TN-00340	1
4.2	Key	TN-00339	1
5	Front LH Carder Rod	MQ-12012	1
5.1	Key	TN-00340	1
5.2	Key	TN-00339	1
6	Front RH Carder Rod	MQ-12012	1
6.1	Key	TN-00340	1
6.2	Key	TN-00339	1
7	Rear Rod	MQ-12015	3
7.1	Key	TN-00339	3
8	Bearing Support	TN-00344	4
9	Bearing Support	TN-00343	6
10	Washer	TN-00132	20
11	Hex Bolt Self-locking nut	TN-00342	20
12	Upper Spindle Shaft Unit	MQ-12010-00A	2
13	Central Carder Shaft Unit	MQ-12011-00A	1
14	Hex Bolt	TN-00114	6
15	Front Spacer	MQ-12070-01	2
16	Rear Spacer	MQ-12070-02	2

MAINTENANCE KITS

Table 26. Maintenance Components List

Pos.	Description	Reference	Amt.
1	Engine Oil 5L	BI-00019	1
2	Antifreeze 5L	BI-00020	1
3	Oil Filter Element	HI-00106	1
4	Diesel Filter Element	HI-00107	1
5	Air Filter Element	HI-00108	1
6	Battery	EL-00214	1
7	Heater Spark Plug	EL-00212	3

Table 27. Spares List

Pos.	Description	Reference	Amt.
1	Engine-Blower Belt	MQ-12244	2
2	Engine-Alternator Belt	MQ-12246	2
3	Engine-Reducer Belt	MQ-12209	1
4	Link Chain 1/2”	MQ-12223-MP	0.5m
5	Link Chain 5/8”	MQ-12221-MP	0.5m
6	Reinforced Rubber Airlock Seal (Optional)	MQ-12003-09A	6
	Polyurethane Airlock Seal (Standard)	MQ-12003-09B	6
	Rubber Airlock Seal (Optional)	MQ-12003-09C	6
7	Cabinet Unit with Alternator DE	EL-00213-CG-DE-NG	1
	Cabinet Unit without Alternator DE	EL-00213-SG-DE-NG	1
	Cabinet Unit with Alternator NL	EL-00213-CG-NL-NG	1
	Cabinet Unit without Alternator NL	EL-00213-SG-NL-NG	1

RECOMMENDATIONS FOR MOUNTING

Table 28. Torque for standar pitch screw

Clase de resistencia (R)								
Calidad/ Dimensiones	4.6	4.8	5.6	5.8	6.8	8.8	10.9	12.9
Diàmetro	R>400N/mm²		R>500N/mm²		R>600N/mm²	R>800N/mm²	R>1000N/mm²	R>1200N/mm²
	Nm	Nm	Nm	Nm	Nm	Nm	Nm	Nm
M3	0,5	0,7	0,6	0,9	1	1,4	1,9	2,3
M4	1,1	1,5	1,4	1,8	2,2	2,9	4,1	4,9
M5	2,3	3	2,8	3,8	4,5	6	8,5	10
M6	3,8	5	4,7	6,3	7,5	10	14	17
M8	9,4	13	12	16	19	25	35	41
M10	18	25	23	31	37	49	69	83
M12	32	43	40	54	65	86	120	145
M14	51	68	63	84	101	135	190	230
M16	79	105	98	131	158	210	295	355
M18	109	145	135	181	218	290	405	485
M20	154	205	193	256	308	410	580	690
M22	206	275	260	344	413	550	780	930
M24	266	355	333	444	533	710	1000	1200
M27	394	525	500	656	788	1050	1500	1800
M30	544	725	680	906	1088	1450	2000	2400

Table 29. Torque for fine pitch screw

Clase de resistencia (R)								
Calidad/ Dimensiones	4.6	4.8	5.6	5.8	6.8	8.8	10.9	12.9
Diàmetro	R>400N/mm²		R>500N/mm²		R>600N/mm²	R>800N/mm²	R>1000N/mm²	R>1200N/mm²
	Nm	Nm	Nm	Nm	Nm	Nm	Nm	Nm
M 8x1	10	14	13	17	20	27	38	45
M 10x1	21	28	26	35	42	56	79	95
M 10x1,25	20	26	24	33	39	52	73	88
M 12x1,25	36	48	45	59	71	95	135	160
M 12x1,5	38	45	42	56	68	90	125	150
M 14x1,5	56	75	70	94	113	150	210	250
M 16x1,5	84	113	105	141	169	225	315	380
M 18x1,5	122	163	153	203	244	325	460	550
M 18x2	117	157	147	196	235	313	440	530
M 20x1,5	173	230	213	288	345	460	640	770
M 20x2	164	218	204	273	327	436	615	740
M 22x1,5	229	305	287	381	458	610	860	1050
M 24x2	293	390	367	488	585	780	1100	1300
M 27x2	431	575	533	719	863	1150	1600	1950
M 30x2	600	800	750	1000	1200	1600	2250	2700

ELECTRICAL SCHEMATIC DIAGRAM

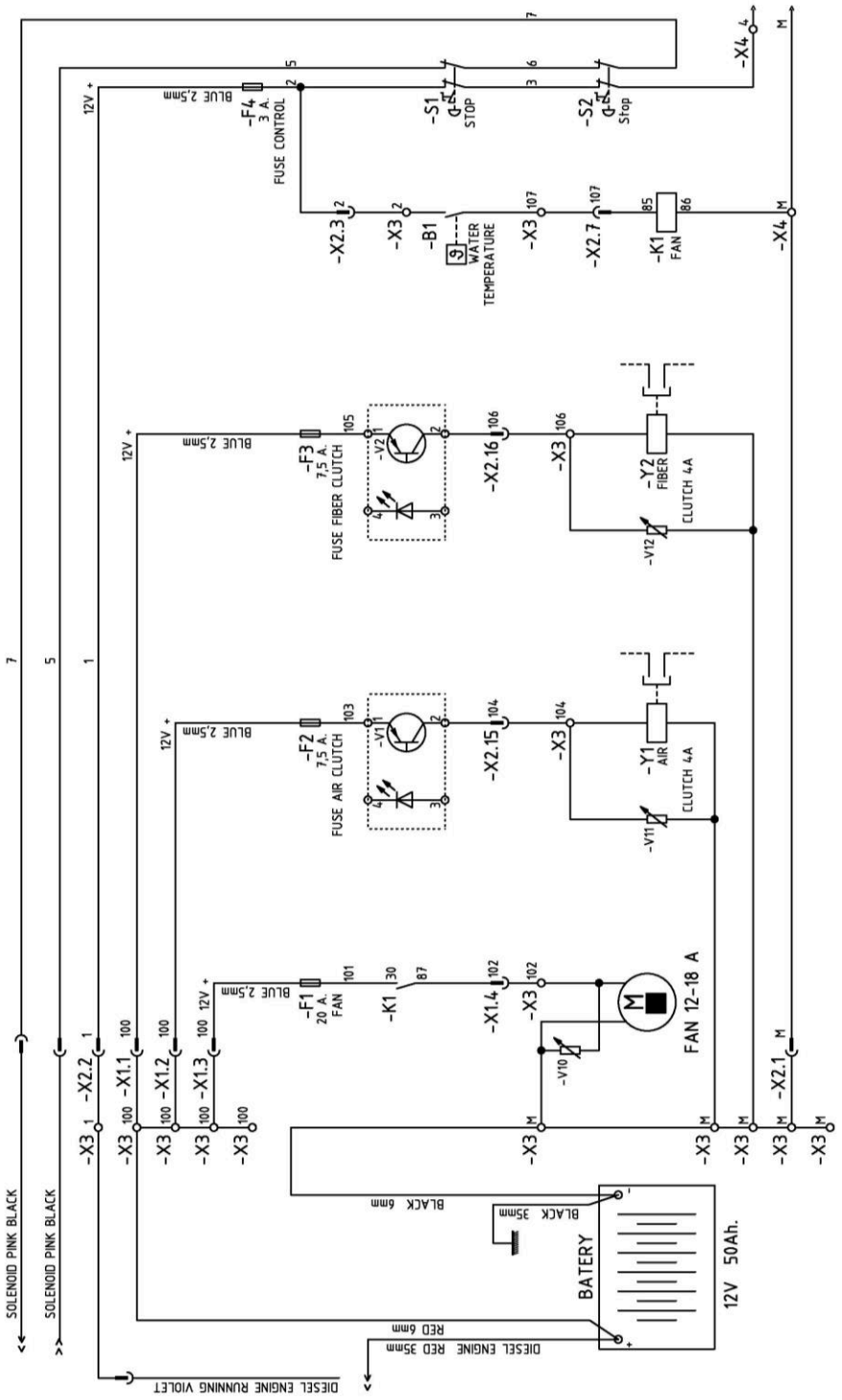

Figure 34. ***Electrical Schematic Diagram (page 1 of 14)***

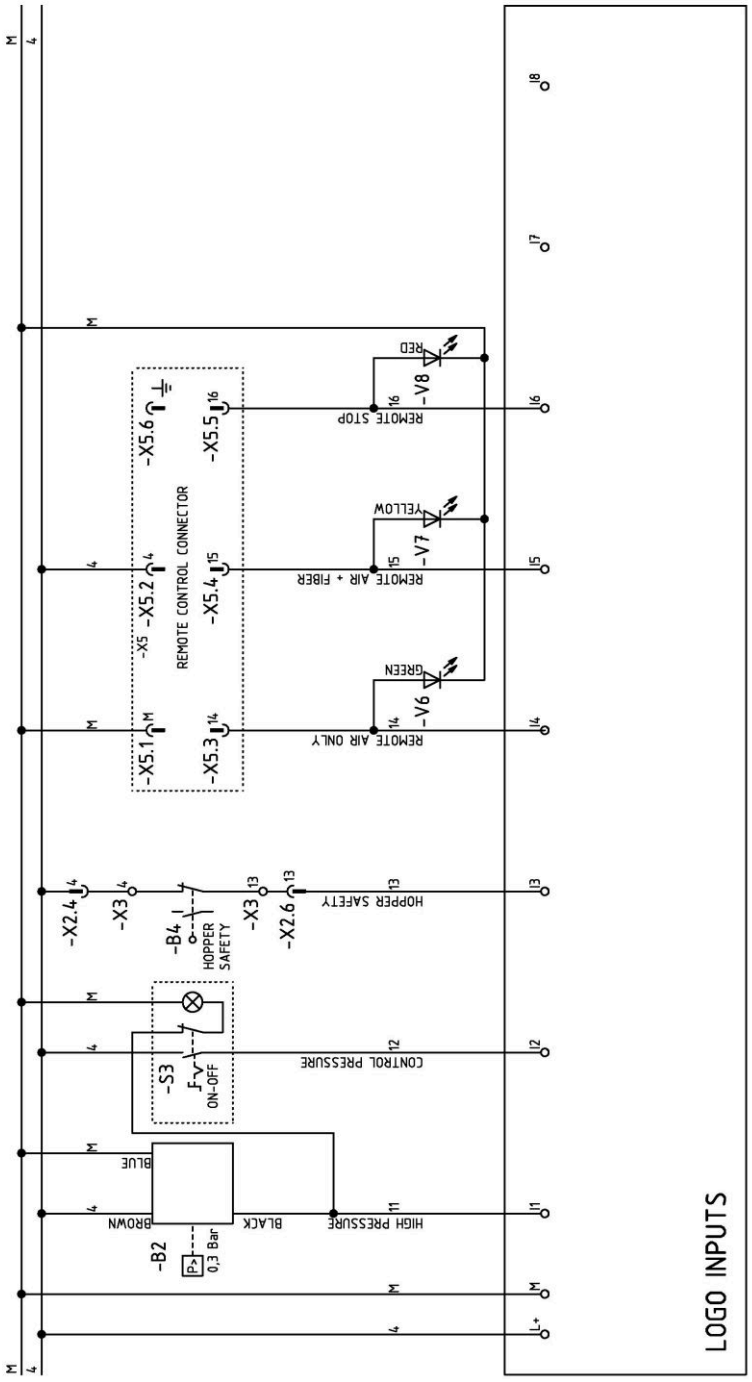

Figure 35. ***Electrical Schematic Diagram (page 2 of 14)***

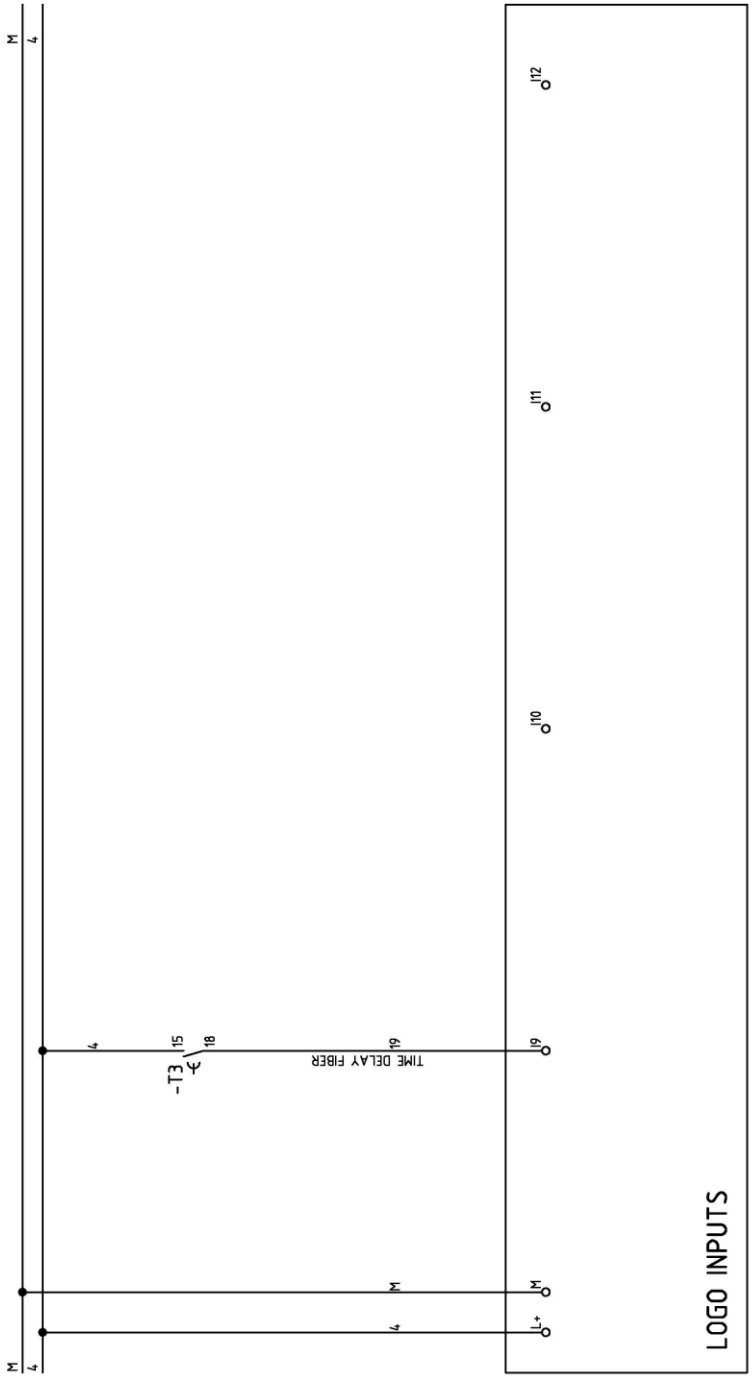

Figure 36. ***Electrical Schematic Diagram (page 3 of 14)***

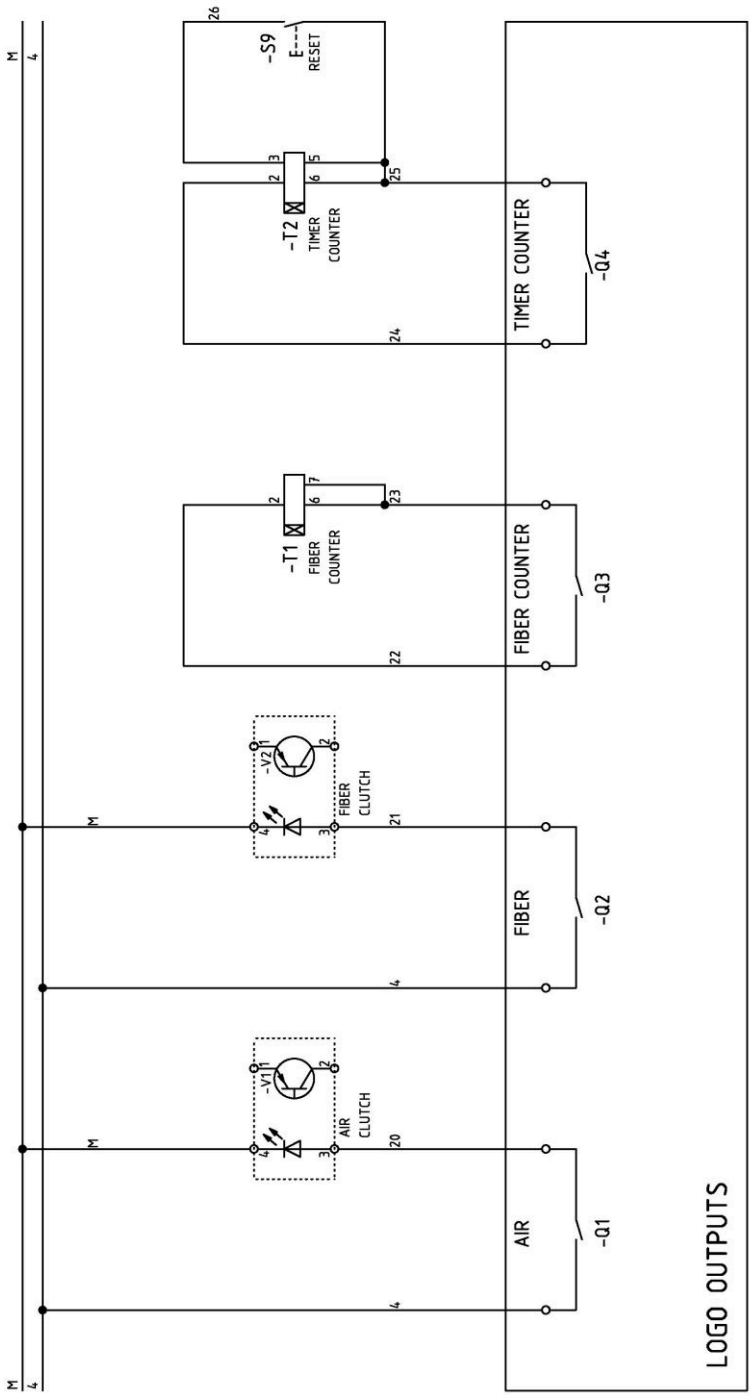

Figure 37. ***Electrical Schematic Diagram (page 4 of 14)***

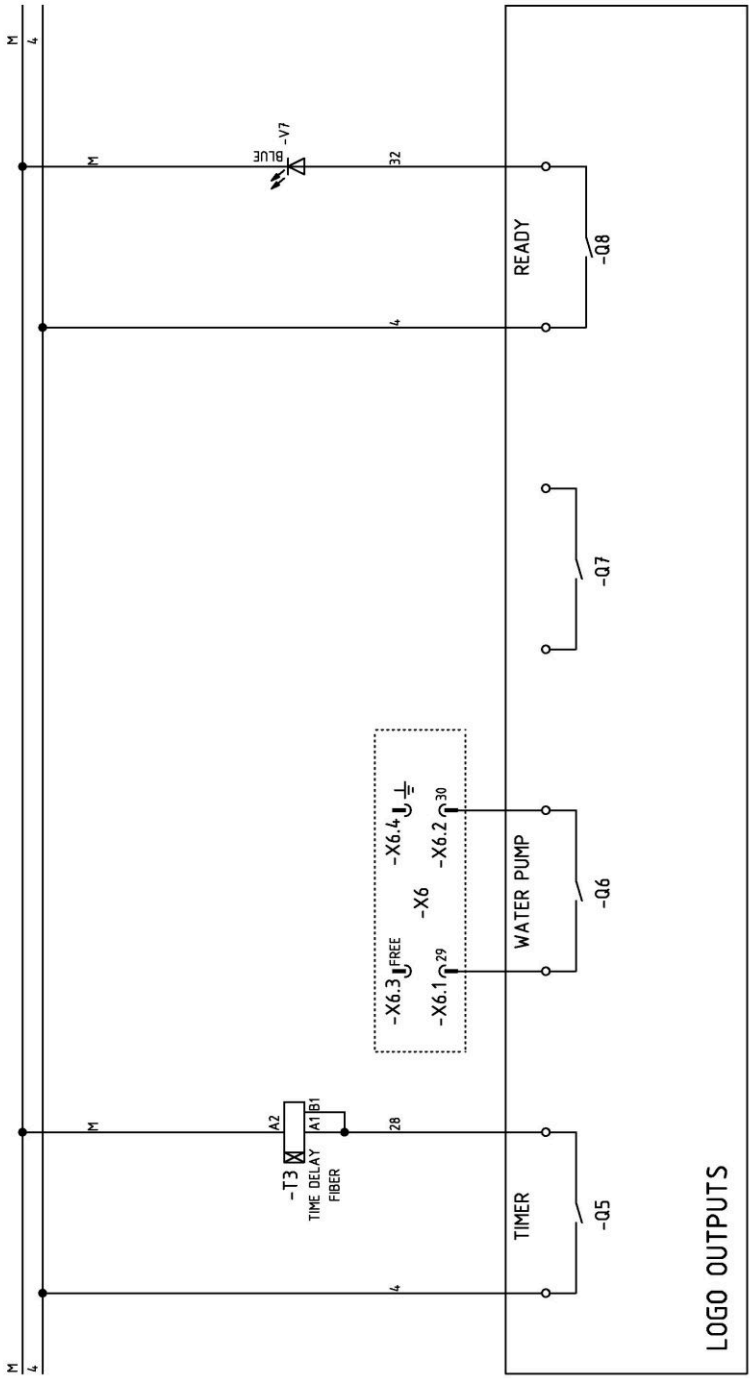

Figure 38. ***Electrical Schematic Diagram (page 5 of 14)***

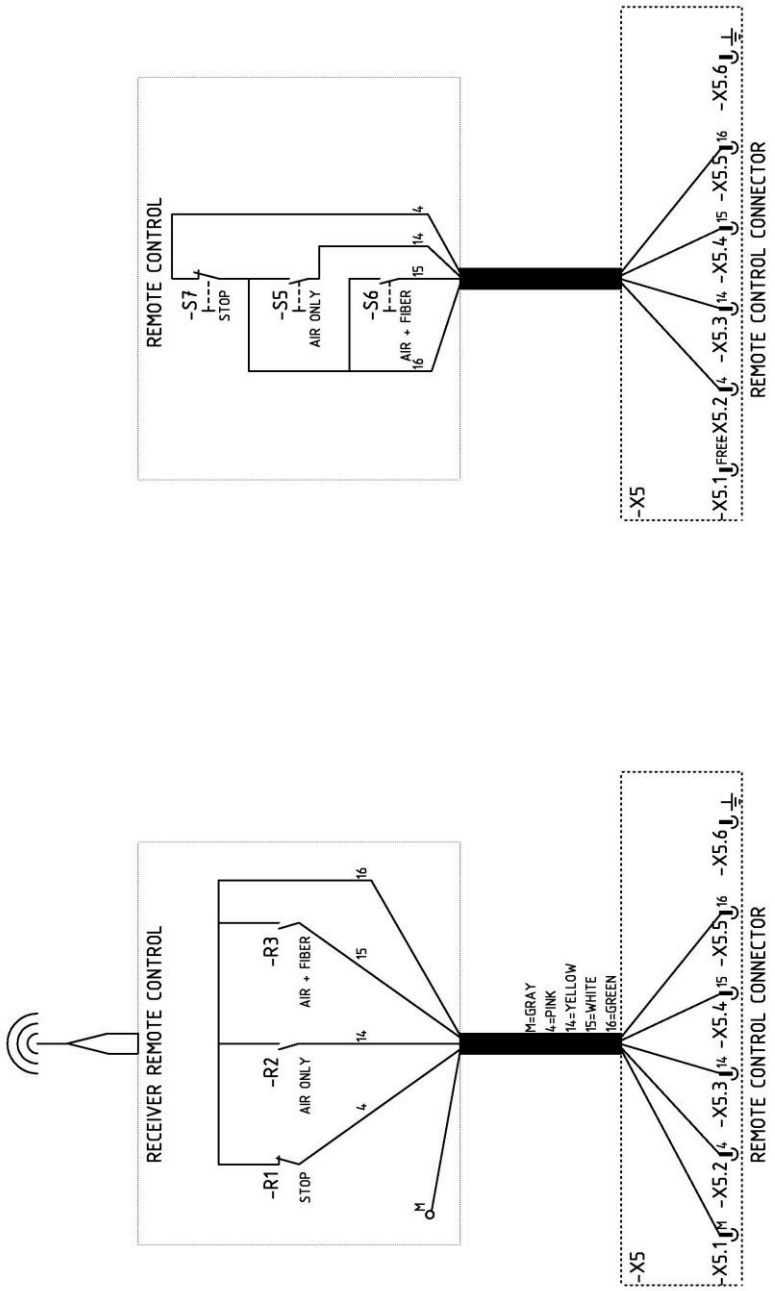

Figure 39. ***Electrical Schematic Diagram (page 6 of 14)***

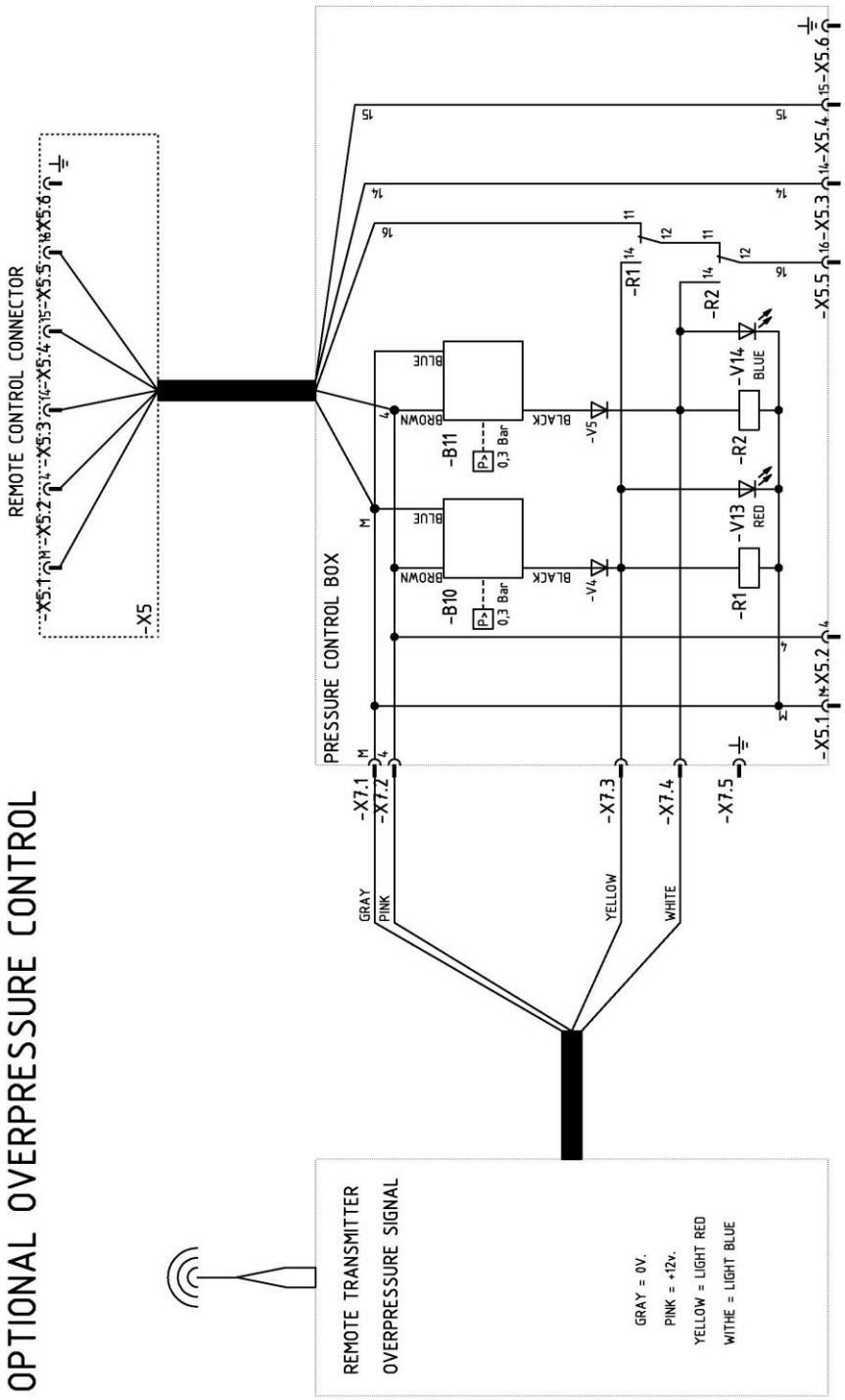

Figure 40. ***Electrical Schematic Diagram (page 7 of 14)***

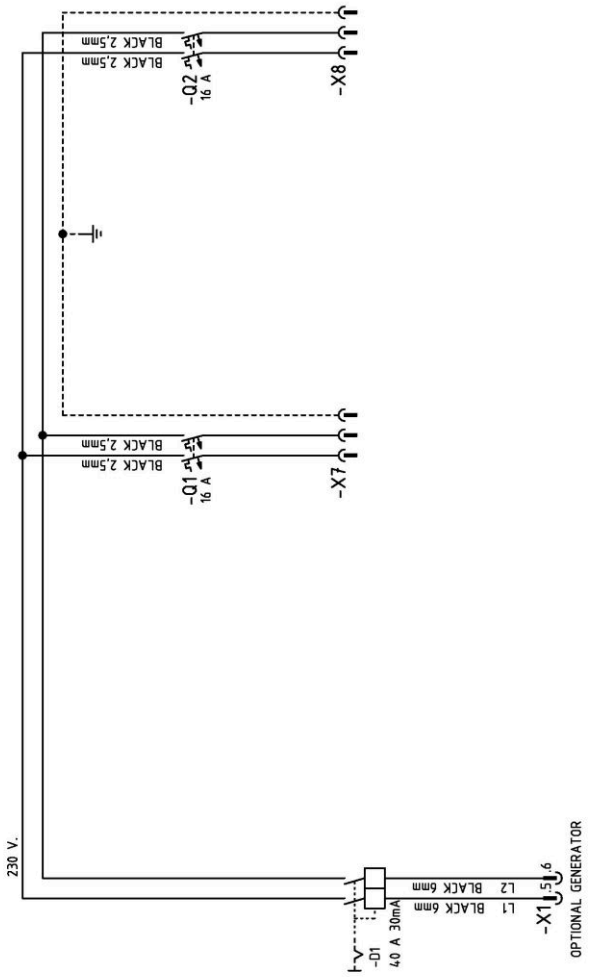

Figure 41. ***Electrical Schematic Diagram (page 8 of 14)***

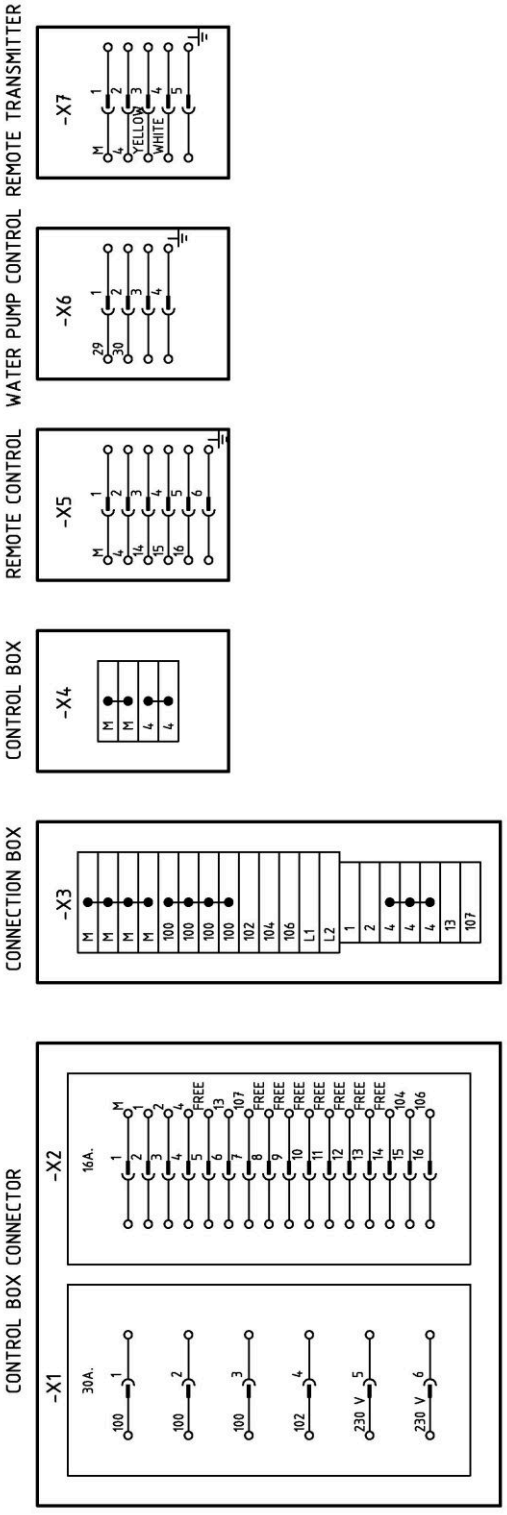

Figure 42. ***Electrical Schematic Diagram (page 9 of 14)***

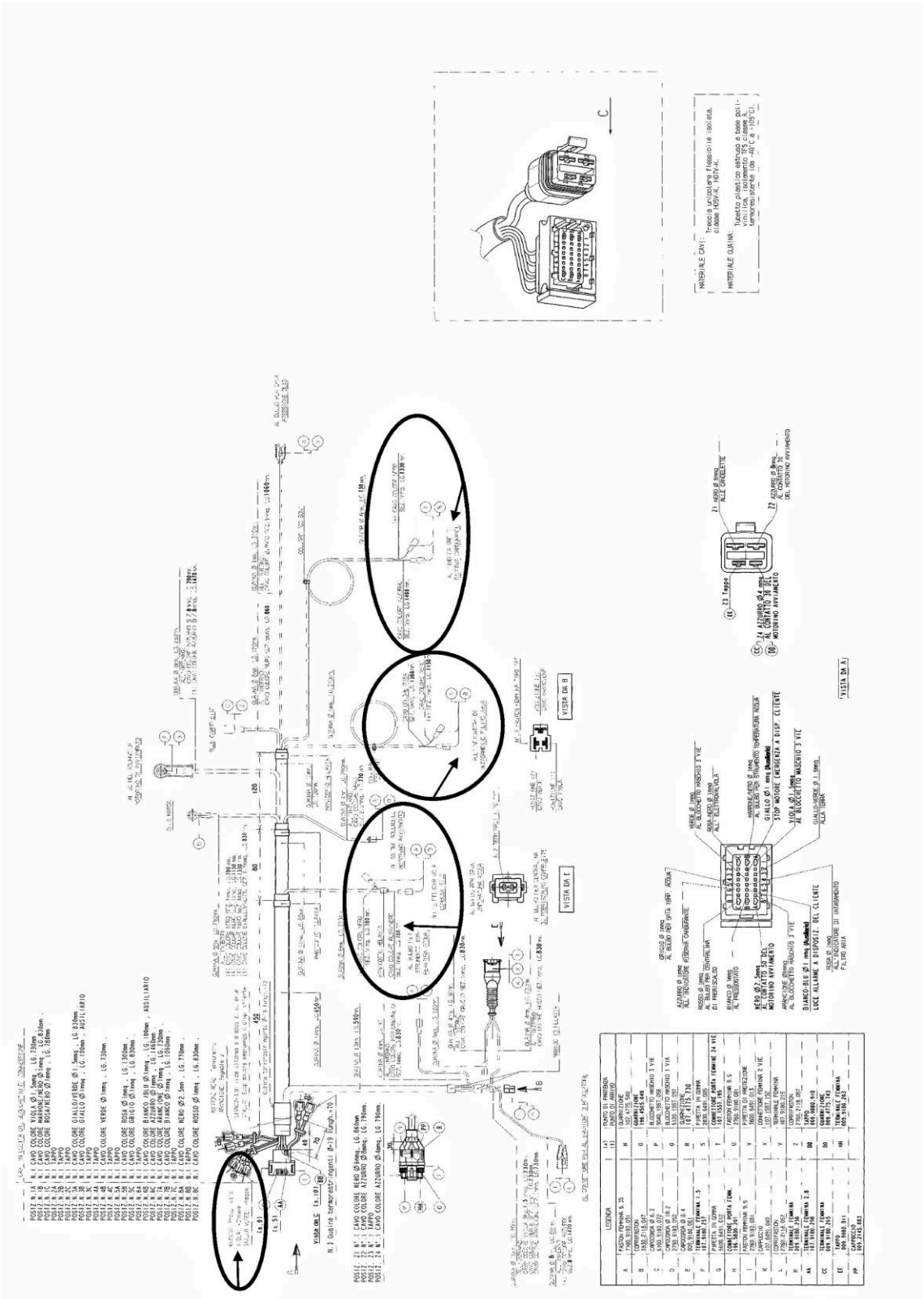

Figure 43 ***Electrical Schematic Diagram (page 10 of 14)***

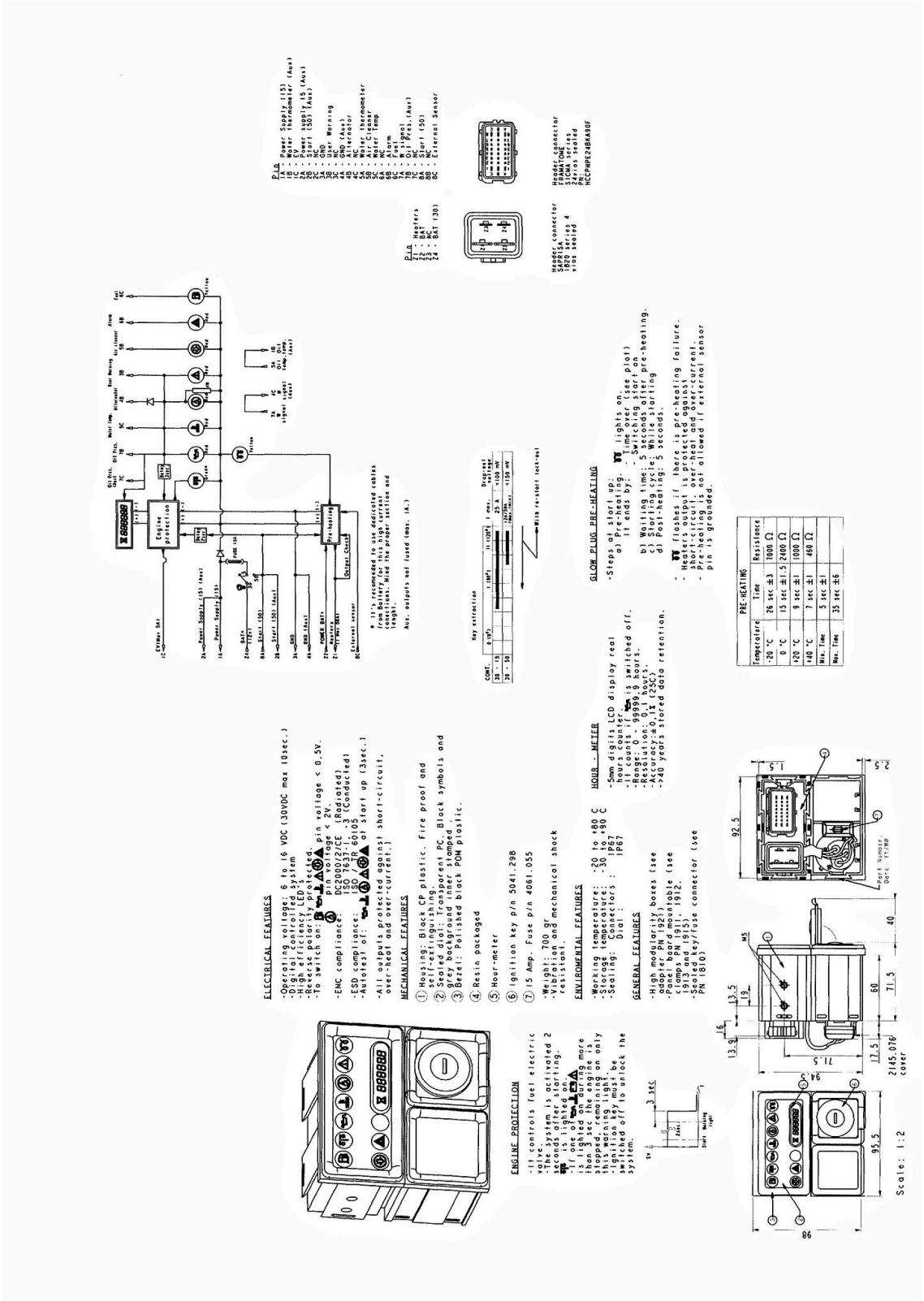

Figure 44 ***Electrical Schematic Diagram (page 11 of 14)***

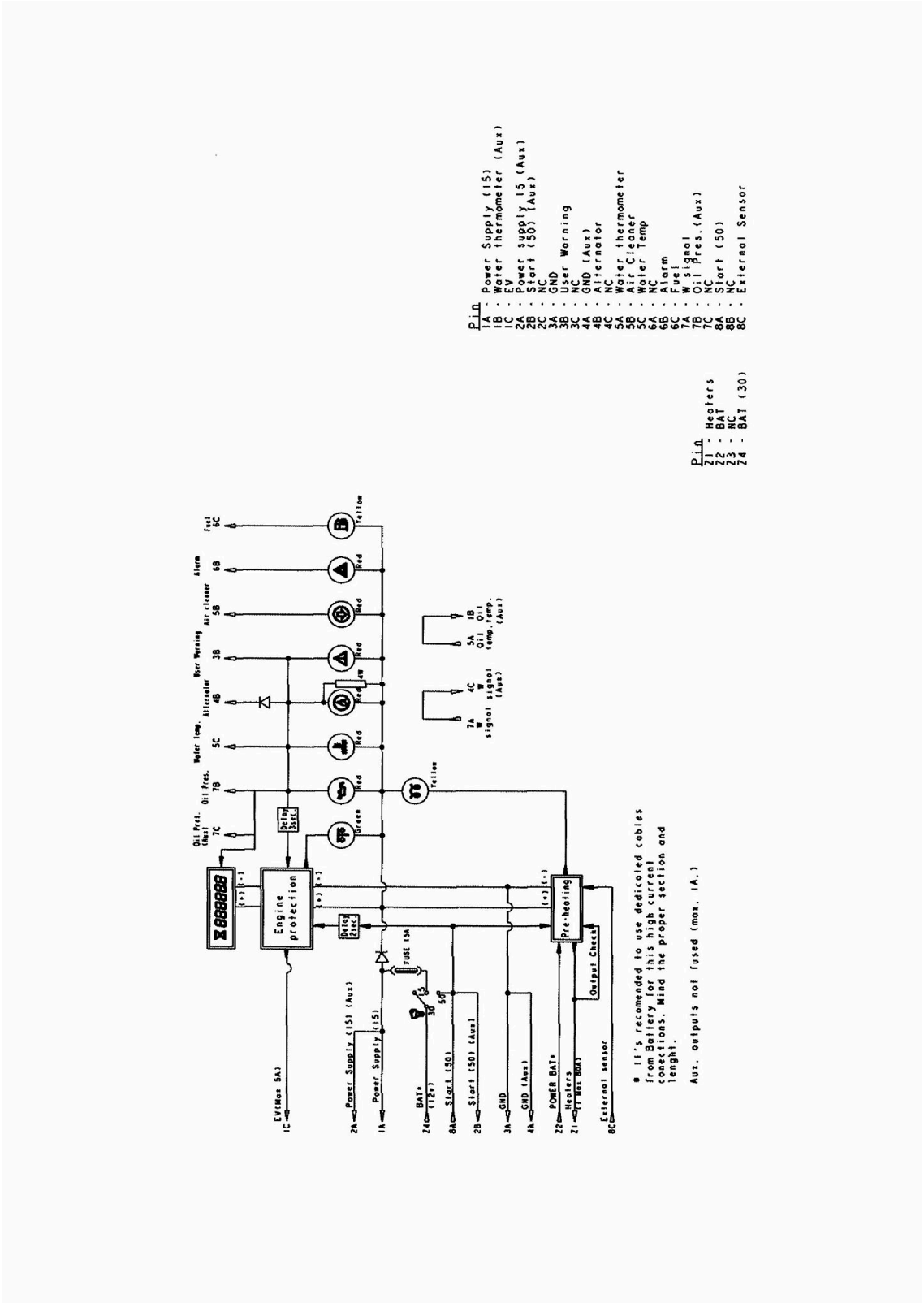

Figure 45 ***Electrical Schematic Diagram (page 12 of 14)***

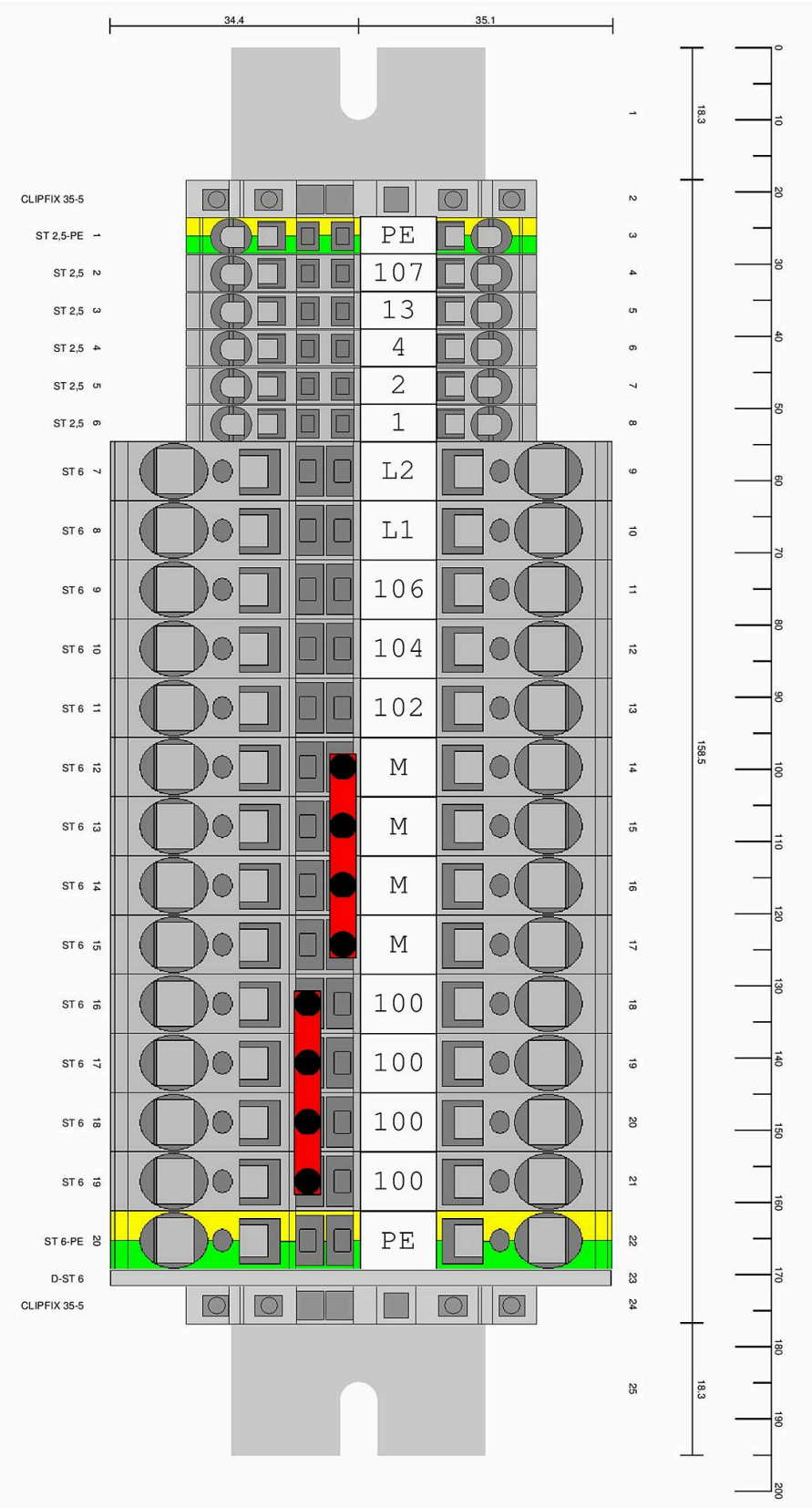

Figure 46 ***Electrical Schematic Diagram (page 13 of 14)***

New H7ET

Operation

■ Operating Modes

H7ET Time Counter

Incrementing Operation (Up)

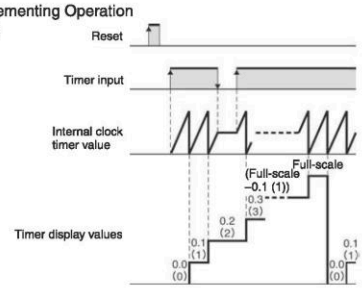

Nomenclature

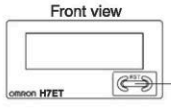

Reset Key
Reset the count value. Not operable under key-protect.

A **Time-range switch**
If the time-range setting is changed, the present value will not be held and so press the Reset Key on the front panel.

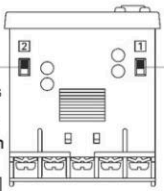

Key-protect Switch **B**
The Reset Key is not operable while the key-protect switch is set to ON.

	Setting (see note)	Time range	
		H7ET-N□□-□□	H7ET-N□□1-□□
A	Front panel ↑ Concave side	0.0h to 3999d23.9h	0s to 999h59min59s (default setting)
	↓ Concave side Terminal block	0.0h to 999999.9h (default setting)	0.0min to 9999h59.9min

	Setting (see note)	Key-protect
B	Front panel ↑ Concave side	OFF (default setting)
	↓ Concave side Terminal block	ON

Note: Perform switch setting before mounting to a control panel.

H7E7-N-B	A	-> OK
	B	-> NO OK
H7E7-N1-B	A	-> OK
	B	-> NO OK

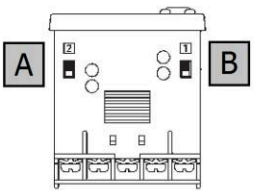

OMRON

Figure 47 ***Electrical Schematic Diagram (page 14 of 14)***

Table 30. Electric Console Components List

Item.	Description	Reference	Qty.
	GROUND TERMINAL BLOCK	EL-00104-11	2
	PHASE TERMINAL BLOCK	EL-00104-09	4
	TERMINAL BLOCK BRIDGE	EL-00104-14	1
	TERMINAL BLOCK MARKING TAG	EL-00104-19	4
	TERMINAL BLOCK SEPARATOR PLATE	EL-00104-20	1
	FUSE HOLDER	EL-00128-07	1
	FUSE 3 A.	EL-00128-04	1
	FUSE 7,5 A.	EL-00128-08	2
	FUSE 20 A.	EL-00128-06	1
	LOGO	EL-00172-00	1
	LOGO MEMORY MODULE	EL-00172-01	1
	LOGO EXPANSION MODULE	EL-00172-02	1
	MOTOR CONTROL BOARD	EL-00173-00	1
	EMERGENCY BUTTON	EL-00131-00	2
	ROTARY SWITCH 2 POSITIONS YELLOW	EL-00131-41	1
	PUSH BOTTON 1 POSITION YELLOW	EL-00131-39	1
	ILLUMINATING UNIT	EL-00131-44	1
	CONTACT BLOCK 1NO SCREW TERMINAL	EL-00131-42	2
	CONTACT BLOCK 1NC SCREW TERMINAL	EL-00131-43	3
	LED LIGHT YELLOW Ø8	EL-00131-23	1
	LED LIGHT RED Ø8	EL-00131-24	1
	LED LIGHT GREEN Ø8	EL-00131-25	1
	LED LIGHT BLUE Ø8	EL-00131-29	1
	EMERGENCY STOP SIGN Ø 22	EL-00131-26	1
	ENCLOSURE FOR RECTANGULAR CONNECTOR	EL-00096-65	2
	FEMALE CONTACT 5 PINS	EL-00096-37	1
	MALE CONTACT 3 PINS	EL-00096-08	1
	TIME COUNTER	EL-00163-10	2
	RED SPLICE TERMINAL	EL-00100-23	6
	TIMER	EL-00163-11	1
	RELAY	EL-00163-12	1
	RELAY HOLDER	EL-00163-13	1
	STATIC SOLID RELAY	EL-00126-08	2
	CABINET 800X300X155	EL-00218	1

Item.	Description	Reference	Qty.
	BULKHEAD CONNECTOR	EL-00095-02	1
	CONNECTOR 6 PINS 30 A.	EL-00096-31	1
	CONNECTOR 16 PINS 16 A.	EL-00096-33	1
	CONNECTOR BASE	EL-00096-35	1
	RESIDUAL CURRENT CB	EL-00108-02	1
	CIRCUIT BREAKER	EL-00112-10	2
	POWER SOCKET 3POLES 16A.	EL-00166-04	2

Table 31. Machine Electrical Components List

Item.	Description	Reference	Qty.
	PHASE TERMINAL BLOCK	EL-00104-06	11**
	GROUND TERMINAL BLOCK	EL-00104-08	1**
	10-POLE TERMINAL BLOCK	EL-00104-12	1**
	PHASE TERMINAL BLOCK	EL-00104-11	1**
	TERMINAL BLOCK	EL-00105-08	1
	VARISTOR	EL-00129-02	3
	FEMALE CONTACT 5 PINS	EL-00096-37	1
	ENCLOSURE FOR RECTANGULAR CONNECTOR	EL-00096-07	1
	MALE CONTACT 5 PINS	EL-00096-38	2+1*
	ENCLOSURE FOR RECTANGULAR CONNECTOR	EL-00096-06	2+1*
	FEMALE CONNECTOR 6 PINS 30 A.	EL-00096-32	1
	FEMALE CONNECTOR 16 PINS 16 A.	EL-00096-34	1
	METALLIC HOOD	EL-00096-36	1
	PUSH BUTTON YELLOW	EL-00131-18	1
	PUSH BUTTON GREEN	EL-00131-27	1
	PUSH BUTTON RED	EL-00131-19	1
	LEGEND HOLDER	EL-00131-28	3
	CONTACT BLOCK 1NO	EL-00131-20	2
	CONTACT BLOCK 1NC	EL-00131-21	1
	EMPTY PUSH BUTTON ENCLOSURE	EL-00151-00	1
	ENCLOSURE LABEL	EM-00050	1
	ENCLOSURE LABEL	EM-00051	1
	ENCLOSURE LABEL	EM-00052	1
	HINGE SWITCH	EL-00020-01	1
	CONTROL CABLE	EL-00173-01	1
	EXTENSION CABLE	EL-00173-02	1

Item.	Description	Reference	Qty.
	GROUND BRAIDS	EL-00103-21	2
	BATTERY POST +	EL-00100-20	1
	BATTERY POST -	EL-00100-21	1
	RED HEAT SHRINK SLEEVING	EL-00101-10	0,5m
	BLACK HEAT SHRINK SLEEVING	EL-00101-02	0,5m
	RING TERMINAL	EL-00100-22	2
	BULKHEAD CONNECTOR	EL-00088-02	1
	FITTING	EL-00087-03	2
	ADAPTER	EL-00091-05	1
	ADAPTER	EL-00091-06	1
	NUT	EL-00090-05	1
	CONNECTION BOX	EL-00158-12	1
	TUBE	EL-00086-02	2m
	CLIPS PMA	EL-00089-00	4
	MOUNTING CLIP	EL-00086-00	2m
	CABLE 3x2,5mm²	EL-00102-05	3m
	CABLE 2x0,5mm²	EL-00102-00	5m
	CABLE 2,5mm²	EL-00103-04	2m
	CABLE 6mm²	EL-00103-20	2m
	CABLE 35mm²	EL-00103-22	3,5m
	HOLDERS	EL-00094-00	11
	PLASTIC STRIP	EL-00093-02	40
	FASTON TERMINAL	EL-00100-17	3
	FASTON TERMINAL	EL-00100-12	2
	FASTON TERMINAL	EL-00100-19	2
	CABLE	EL-00102-07	1
	REMOTE	EL-00151-01	1*
	TRANSMITTER	EL-00151-02	1*
	GROUND PIKE	EL-00217-01	1
	GROUND PIKE CLAMP	EL-00217-02	1
	BATTERY CLAMP	EL-00217-03	1
	GROUND CONNECTION KIT	EL-00217-00	1

Parts marked with * are optional.

Parts marked with ** are optional with Weidmüller Terminal.

CONTENTS

GUARANTEE 2
INJECTION UNIT Mod. novaG - fill 60 3
EXHAUST UNIT Mod. novaG - fill 60 5
HOSE UNIT Mod. novaG - fill 60 6
ELECTRIC CONSOLE 8
GUARDS 14
Upper Guards 18
Left Removable Guard 19
Right Removable Guard 20
Rear Guard 21
AIRLOCK DISPENSING UNIT 22
Airlock Dispenser Explosion System 23
ENGINE COOLING circuit 25
FUEL CIRCUIT 28
Fuel Tank Explosion System 30
TRANSMISSION 32
Exterior Transmission Explosion System 32
Chain Tensioners Detail 34
Interior Transmission Explosion System 35
AIR DUCTS 41
SHAFTS 45
MAINTENANCE KITS 48
Recommendations for Mounting 49
ELECTRICAL SCHEMATIC DIAGRAM 50
CONTENTS 67
LIST OF ILLUSTRATIONS 68
LIST OF TABLES 70

LIST OF ILLUSTRATIONS

Figure 1. Injection unit model novaG - fill 60 3
Figure 2. Exhaust Unit 5
Figure 3. Hose Unit 6
Figure 4. Electric Console, standard model without generator 9
Figure 5. Electric Console, special model with generator 11
Figure 6. Model novaG - fill 60 Guards 14
Figure 7. Console Fixing, Door Micro Switch and Dispenser Chutes 15
Figure 8. Dispenser Chutes & Ground Connection 15
Figure 9. Left Upper Guard 18
Figure 10. Right Upper Guard 18
Figure 11. Left Side Guard 19
Figure 12. Right Side Guard 20
Figure 13. Rear Guard 21
Figure 14. Airlock Dispensing Unit Assembly 22
Figure 15. Airlock Dispenser Explosion System 23
Figure 16. Engine Cooling Circuit 25
Figure 17. Engine Fuel Circuit 28
Figure 18. Fuel Tank Explosion System 30
Figure 19. Exterior Transmission Explosion System 32
Figure 20. Chain Tensioners Detail 34
Figure 21. Primary Engine Transmission Explosion System 35
Figure 22. Secondary Engine Transmission Explosion System 35
Figure 23. Blower Transmission Explosion System 36
Figure 24. Explosión Transmisión Reductor Pendular 36
Figure 25. Alternator Transmission Explosion System (Optional) 37
Figure 26. General Air Duct Assembly 41
Figure 27. Detail of Air Control Assembly 41
Figure 28. Detail of Air Filter Assembly 42
Figure 29. Detail of Pressure Line Assembly 42
Figure 30. Front Side Shaft and Spindle Assembly 45
Figure 31. Rear Side Spindle Assembly 45
Figure 32. Rear Side Shaft Assembly 46
Figure 33. Carder Shaft Assembly 46

Figure 34. Electrical Schematic Diagram (page 1 of 14) 50
Figure 35. Electrical Schematic Diagram (page 2 of 14) 51
Figure 36. Electrical Schematic Diagram (page 3 of 14) 52
Figure 37. Electrical Schematic Diagram (page 4 of 14) 53
Figure 38. Electrical Schematic Diagram (page 5 of 14) 54
Figure 39. Electrical Schematic Diagram (page 6 of 14) 55
Figure 40. Electrical Schematic Diagram (page 7 of 14) 56
Figure 41. Electrical Schematic Diagram (page 8 of 14) 57
Figure 42. Electrical Schematic Diagram (page 9 of 14) 58
Figure 43 Electrical Schematic Diagram (page 10 of 14) 59
Figure 44 Electrical Schematic Diagram (page 11 of 14) 60
Figure 45 Electrical Schematic Diagram (page 12 of 14) 61
Figure 46 Electrical Schematic Diagram (page 13 of 14) 62
Figure 47 Electrical Schematic Diagram (page 14 of 14) 63

LIST OF TABLES

Table 1. Injection Unit Components List 4
Table 2. List of Machine References according to Model 4
Table 3. Exhaust Unit Components List 5
Table 4. Hose Unit Components List 7
Table 5. Injection Nozzle Unit Components List 7
Table 6. Electric Console Variants 8
Table 7. Components List for Electric Console, standard model without generator 9
Table 8. Components List for Electric Console, special model with generator 11
Table 9. Front Panel Unit Components List 13
Table 10. Injection Unit Guard List 16
Table 11. Upper Guard Components List 18
Table 12. Left Side Guard Components List 19
Table 13. Right Side Guard Components List 20
Table 14. Rear Guard Components List 21
Table 15. Airlock Assembly Components List 22
Table 16. Airlock Components List 23
Table 17. Blade Seal Models 24
Table 18. Cooling Circuit Components List 25
Table 19. Engine Fuel Circuit Components List 29
Table 20. Fuel Tank Components List 31
Table 21. Exterior Transmission Components List 33
Table 22. Chain Tensioners Detail, Parts List 34
Table 23. Interior Transmission Components List 38
Table 24. Air Duct Components List 43
Table 25. Shaft List 47
Table 26. Maintenance Components List 48
Table 27. Spares List 48
Table 28. Torque for standar pitch screw 49
Table 29. Torque for fine pitch screw 49
Table 30. Electric Console Components List 64
Table 31. Machine Electrical Components List 65